REV	DESCRIPTION	BY	CHK	DATE	ECN / MPS
A	ENGINEERING RELEASE	AGJ	RAF	10-29-97	M18599
D	REVISED	SSD		02-25-10	M78476

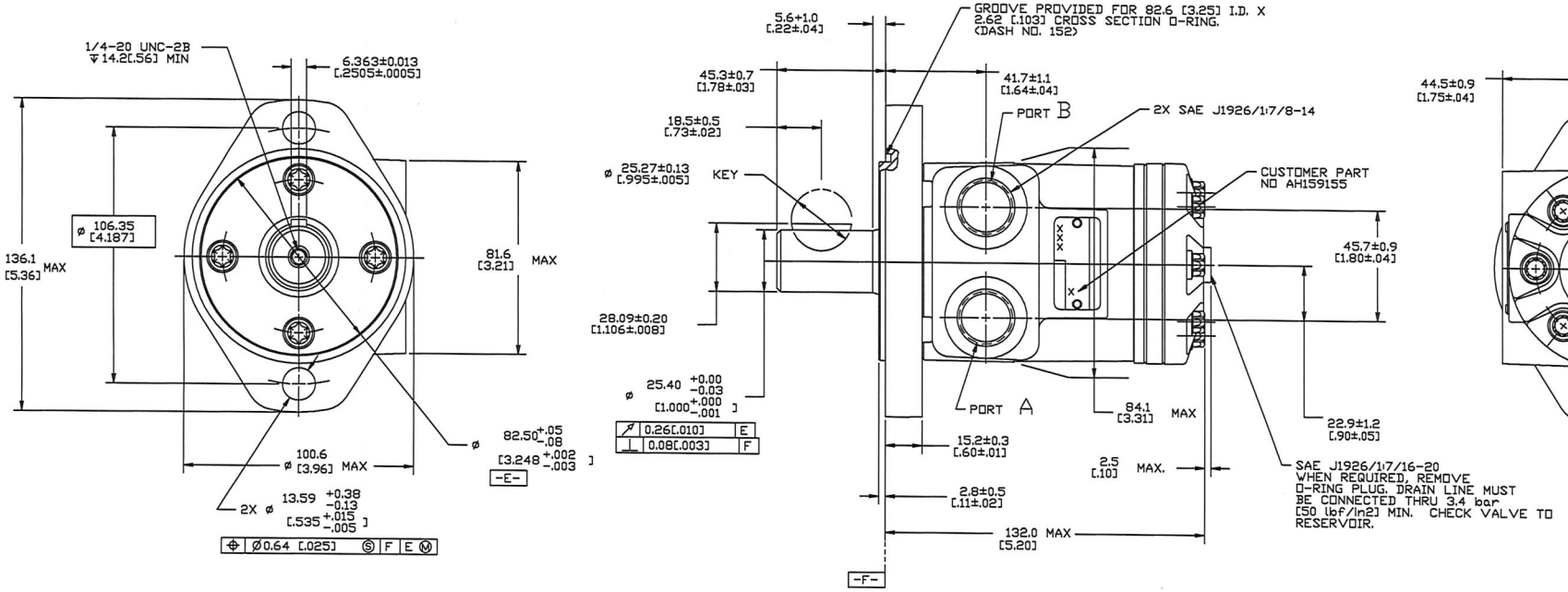

NOTE

1 ROTATION:
STANDARD: WHEN FACING SHAFT END OF MOTOR, SHAFT TO ROTATE CLOCKWISE WHEN PORT 'A' IS PRESSURIZED COUNTERCLOCKWISE WHEN PORT 'B' IS PRESSURIZED

2 DISPLACEMENT:
028 = 46 cm3/r [2.8 in3/r]

3 MOUNTING FLANGE:
AA = 2 BOLT STD: ø 82.6 [3.25] X 3.0 [.12] PILOT
ø 13.59 [.535] MOUNTING HOLES ON ø 106.2 [4.18] B.C.

4 OUTPUT SHAFT:
01 = ø 25.4 [1.00] STRAIGHT WITH WOODRUFF KEY AND 1/4-20 THREADED HOLE

5 PORT TYPE:
AA = 7/8-14 UNF-2B SAE O-RING PORTS

6 CASE DRAIN:
D = INTERNAL CHECK VALVES, .4275-20 UNF-2B SAE O-RING PORT (END CAP)

CMAH159155

REVIEWED FOR CLASSIFICATION PER ESP-042

DRAWING BASED ON ANSI Y14.5M-1982

THE REPRODUCTION, DISTRIBUTION AND UTILIZATION OF THIS DOCUMENT AS WELL AS THE COMMUNICATION OF ITS CONTENTS TO OTHER WITHOUT EXPLICIT AUTHORIZATION IS PROHIBITED. OFFENDERS WILL BE HELD LIABLE FOR THE PAYMENT OF DAMAGES. ALL RIGHT RESERVED IN THE EVENT OF THE GRANT OF A PATENT, UTILITY MODEL OR DESIGN. (REF ISO 16016)

Danfoss

UNLESS OTHERWISE SPECIFIED ALL DIMENSIONS ARE IN INCHES / MILLIMETERS (INCHES)

TOLERANCES
X ± ---
XX ± ---
XXX ± ---
∠ ± ---°

UNSPECIFIED RADII ARE: ---

UNSPECIFIED DRAFT ANGLES ARE: ---°

THIRD ANGLE PROJECTION

D SIZE — DO NOT SCALE

DRAWN AGJ BY/DATE 10-29-97
CHECKED RAF BY/DATE 10-30-97
ENGRG RJE BY/DATE 10-30-97
METALLURGY ------ BY/DATE ------

MATERIAL/HEAT TREAT: -

TITLE: H MOTOR INSTALLATION

NUMBER: 101-2627-009

SCALE 1/1 — SHEET 1 OF 1