Hydraulics Network

CATALOGUE 2026

HYDRAULIC MOTORS

MiMOTION®

	M+S Series		HydNet	Bosch Rexroth	Brevini/ Sam	Danfoss	Eaton Char Lynn	Parker	Ross/TRW	White
GEROTOR MOTORS	MM Page 205		BMM (EU)	MGX	BGM	OMM				WM (125/ 126)
	MLHM Page 207		BMM (US)			OMM (US)	J Series			
	MP Page 209		BMP	MGP/ GMP	BGE	OMP			MF	WP (155)
	MPYN Page 211					OMPX				
	MLHP Page 213					OMP (US)				
	HP Page 215		BMPH		BH	DH	H Series	TB	MG	WD (145)
	PL Page 217							TE		
GEROLER MOTORS	MR Page 219		BMR	MGR/ GMR	BRE	OMR				WR (255)
	MRYN Page 221					OMRX				
	MLHR Page 223					OMR (US)				
	HR Page 225		BMRS		BS	DS	S,T Series			WG
	RL Page 227							TE	MB	RS (200)

	M+S Series		HydNet	Bosch Rexroth	Brevini/ Sam	Danfoss	Eaton Char Lynn	Parker	Ross/TRW	White
GEROLER MOTORS	MH Page 229					OMH				
GEROLER MOTORS	MLHH Page 231									
GEROLER MOTORS	RW Page 233			MGRW		OMEW				
GEROLER MOTORS	HW Page 235							TG		RE (500)
DISC VALVE MOTORS	MS Page 237		BMSY (EU)	MGS/ GMS	HR	OMS				WS
DISC VALVE MOTORS	MLHS Page 239		BMSY (US)		HRS	OMS (US)	2000 Series	TG	ME	RE (500)
DISC VALVE MOTORS	MYZ Page 241						4000 Series		MJ	
DISC VALVE MOTORS	MT Page 243		BMT	MGT/ GMT	HT	OMT				
DISC VALVE MOTORS	MLHT Page 245					OMT (US)				
DISC VALVE MOTORS	MTM Page 247					TMT	6000 Series			
DISC VALVE MOTORS	MV Page 249		BMV	MGV/ GMV		OMV				
DISC VALVE MOTORS	MLHV Page 251					OMT (US)				

TECH DATA

MM Series Gerotor Motor

Standard Pricing: Shaft 16mm Straight Keyed, Mount 3-bolt, Ports 3/8" BSPP Rear, Case 1/8" BSPP

Part #	DISPLACEMENT	ROTOR	SPEED	FLOW	PRESSURE DROP	INLET PRESSURE	TORQUE	WEIGHT
	(cc)	Width L1 (mm)	Max. Cont. (RPM)	Max. Cont. (L/min)	Max. Cont. (Bar)	Max. Cont. (Bar)	Max. Cont. (Nm)	(Kg)
MM 8 C	8.2	3.5	1950	16	100	140	11	2
MM 12.5 C	12.5	5.5	1550	20	100	140	16	2.1
MM 20 C	19.9	8.5	1000	20	100	140	25	2.2
MM 32 C	31.6	13.5	630	20	100	140	40	2.3
MM 40 C	39.8	17	500	20	90	140	45	2.4
MM 50 C	50	21	400	20	70	140	46	2.6

To ensure best motor life, fill with fluid and run at moderate load for 5-10 minutes

Equivalent to:
BMM (EU) *Hydnet*
MGX *Bosch Rexroth*
BGM *Brevini*
OMM *Danfoss*
WM(125/126) *White*

M+S HYDRAULIC
MADE IN EUROPE

Seal Kits

Part #	Pressure Rating without Drain Line
MM-SKD	140 bar ≤100 RPM
MM-SKV	140 bar ≤100 RPM

Nomenclature

MM	OPTION		MOUNTING A		PORTS		DISP.	SHAFTS		MOUNTING B	
	Code	Description	Code	Description	Code	Description	8-50cc	Code	Description	Code	Description
	D	Dual crossline Relief	-	Round 3-bolt 31.5mm spigot	-	Rear ports 3/8" BSPP		C	16mm keyed	-5	Round 5-bolt M6
			F	Oval 2-bolt 63mm spigot	S	Side ports 3/8" BSPP		CK	14mm keyed	RS SHL5	Universal speed sensor 5m lead
								SH	16.5mm 9T splined		

MM Standard MM Series

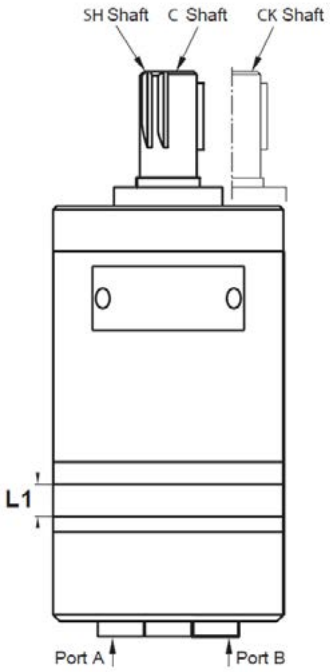

MMF MMF Series

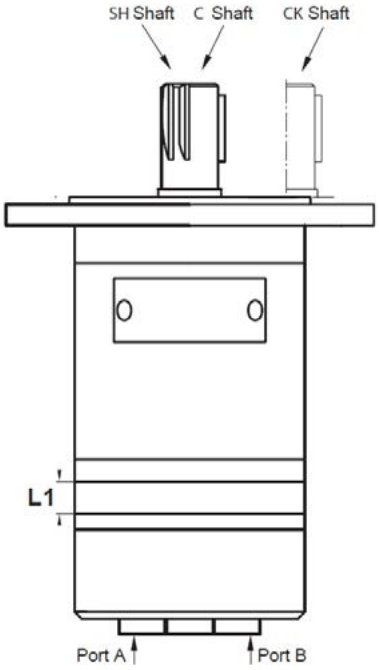

S Side Ports

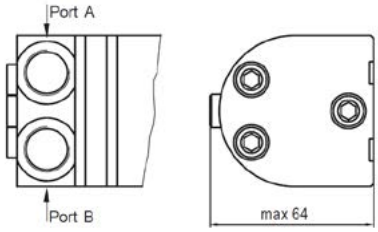

- Standard Rear Ports

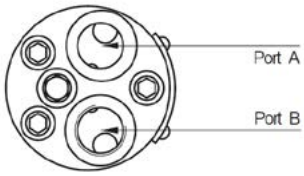

- Standard Mount M6 3-bolt

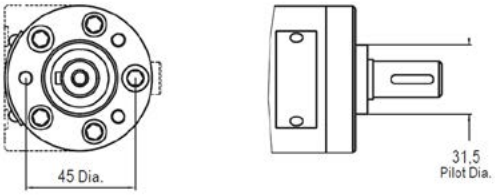

C 16mm Keyed Shaft

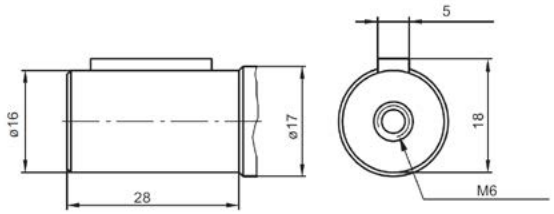

F Oval Mount 2-bolt

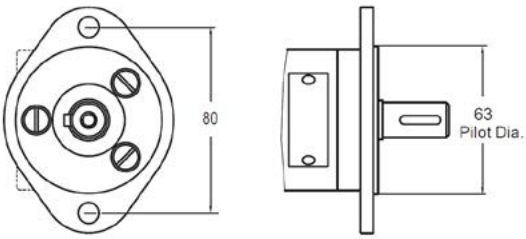

CK 14mm Keyed Shaft

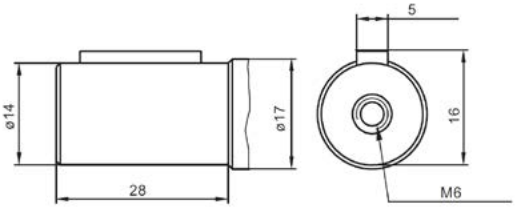

-5 Mount M6 5-bolt

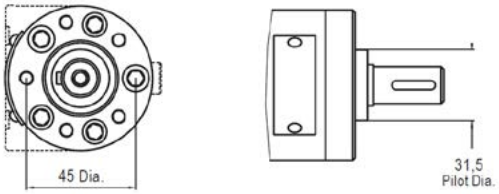

SH 16.5mm 9T Splined Shaft

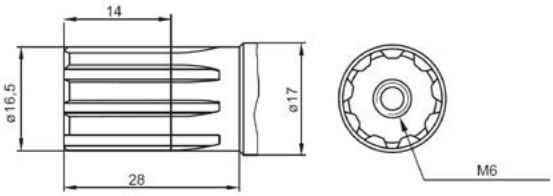

TECH DATA

MLHM Series Gerotor Motor

Standard Pricing: Shaft 5/8" Straight Keyed, Mount 3-bolt, Ports 9/16" UNF Rear, Case 3/8" UNF

Part #	DISPLACEMENT	ROTOR	SPEED	FLOW	PRESSURE DROP	INLET PRESSURE	TORQUE	WEIGHT
	(cc)	Width L1 (mm)	Max. Cont. (RPM)	Max. Cont. (L/min)	Max. Cont. (Bar)	Max. Cont. (Bar)	Max. Cont. (Nm)	(Kg)
MLHM 8 C7	8.2	3.5	1950	16	100	140	11	2
MLHM 12.5 C7	12.5	5.5	1550	20	100	140	16	2.1
MLHM 20 C7	19.9	8.5	1000	20	100	140	25	2.2
MLHM 32 C7	31.6	13.5	630	20	100	140	40	2.3
MLHM 40 C7	39.8	17	500	20	90	140	45	2.4
MLHM 50 C7	50	21	400	20	70	140	46	2.6

To ensure best motor life, fill with fluid and run at moderate load for 5-10 minutes

Equivalent to:
BMM (US) *Hydnet*
OMM *Danfoss*
J-Series *Eaton Char Lynn*

M+S HYDRAULIC
MADE IN EUROPE

Seal Kits

Part #	Pressure Rating without Drain Line
MLHM-SK	140 bar ≤100 RPM

Nomenclature

MLHM	MOUNTING A		DISP.	SHAFTS		PORTS		OPTION		MOUNTING B	
	Code	Description	8-50cc	Code	Description	Code	Description	Code	Description	Code	Description
	-	Round 3-bolt 31.5mm spigot		C	5/8" straight keyed	7	Rear ports 9/16" UNF	D	Dual crossline relief	-5	Round 5-bolt 1/4" UNF
	F	Oval 2-bolt 63mm spigot		G	16.5mm 9T splined	4	Side ports 9/16" UNF				

MLHM Standard MHLM Series

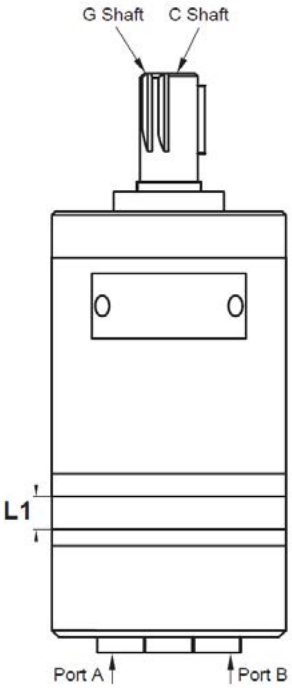

MLHMF MLHMF Series

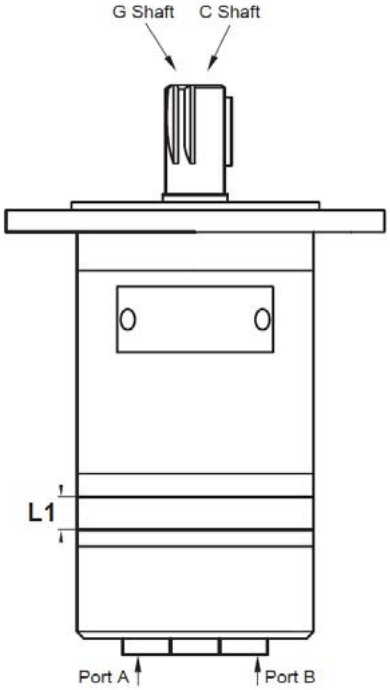

7 Rear Ports

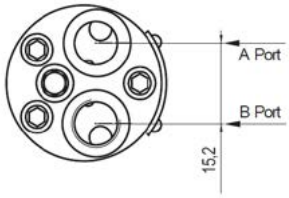

S Side Ports

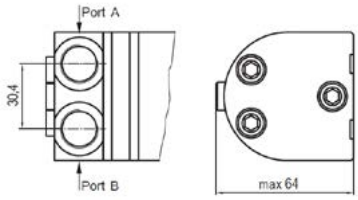

- Standard Mount 1/4" UNF 3-bolt

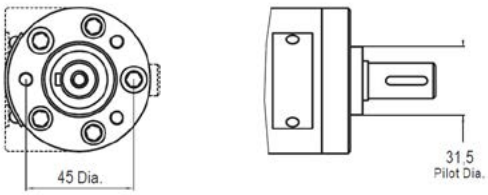

C 5/8" Straight Keyed Shaft

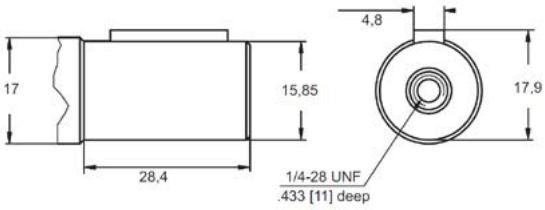

F Oval Mount 2-bolt

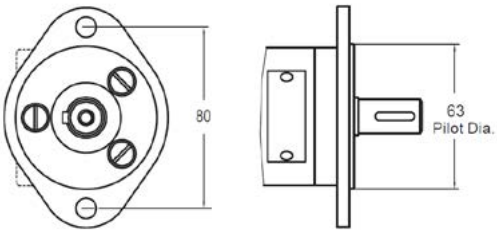

G 16.5mm 9T Splined Shaft

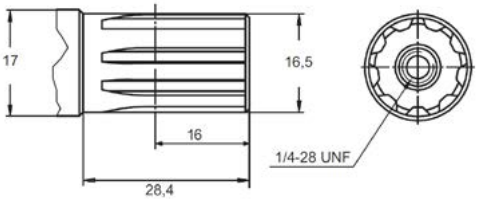

-5 Mount 1/4" UNF 5-bolt

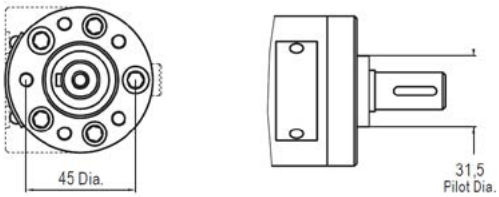

TECH DATA

MP Series Gerotor Motor

Standard Pricing: Shaft 1" Straight Keyed, Mount SAE A 2-bolt, Ports 1/2" BSPP, Case 1/4" BSPP

Part #	DISPLACEMENT	ROTOR	SPEED	FLOW	PRESSURE DROP	INLET PRESSURE	TORQUE	WEIGHT
	(cc)	Width L1 (mm)	Max. Cont. (RPM)	Max. Cont. (L/min)	Max. Cont. (Bar)	Max. Cont. (Bar)	Max. Cont. (Nm)	(Kg)
MPN 25 COD	28.4	5.2	1408	40	100	175	33	6.1
MPN 32 COD	34.5	6.3	1450	50	100	175	43	6.1
MPN 40 COD	40.5	7.4	1480	60	120	175	62	6.2
MPN 50 COD	49.5	6.67	1210	60	140	175	94	6.3
MPN 60 COD	59.5	8.25	983	60	140	175	110	6.3
MPN 80 COD	79.2	10.67	755	60	140	175	151	6.4
MP 100 COD	99	13.33	605	60	140	175	193	6.6
MP 125 COD	123.8	16.67	486	60	140	175	237	6.7
MP 160 COD	158.4	21.33	378	60	140	175	313	6.9
MP 200 COD	198	26.67	303	60	140	175	366	7.1
MP 250 COD	247.5	33.33	242	60	110	175	380	7.3
MP 315 COD	316.8	42.67	190	60	90	175	380	7.6
MP 400 COD	396	53.33	150	60	70	175	360	8.2
MP 500 COD	495	66.63	120	60	60	140	390	9.4
MP 630 COD	623.6	84	95	60	55	140	440	10.1

To ensure best motor life, fill with fluid and run at moderate load for 5-10 minutes

Equivalent to:
BMP *Hydnet*
MGP/GMP *Bosch Rexroth*
BGE *Brevini*
OMP *Danfoss*
MF *Ross/TRW*
WM(155) *White*

M+S HYDRAULIC
MADE IN EUROPE

Seal Kits

Part #	Pressure Rating without Drain Line
MP-SKD	150 bar ≤100 RPM
MPQ-SKD	150 bar ≤100 RPM
MP-SKU	200 bar ≤200 RPM
MPQ-SKU	200 bar ≤200 RPM
MP-SKV	150 bar ≤100 RPM
MP-SKB	100 bar ≤100 RPM

Nomenclature

MP

MOUNTING		OPTIONS		DISP.
Code	Description	Code	Description	25-630cc
-	SAE A 2-bolt 82.5mm spigot	N	Needle bearings	
Q	Square 4-bolt 44.4mm spigot	E	Rear ports 1/2" BSPP	
F	Magneto 4-bolt 82.5mm spigot			
W	Wheel mount 80mm spigot			
WF	Sweepers special mount			

SHAFTS		SHAFT SEALS	
Code	Description	Code	Description
CO	1" straight keyed	D	150 Bar *
C	25mm straight keyed	U	200 Bar * +
CB	32mm straight keyed	V	150 Bar viton *
SH	1" 6B splined	RS SHL5	Universal speed sensor 5m lead
HB	1.1/4" 14T splined	ST	Electronic speed sensor
K	28.56mm 1:10 tapered		
KB	35mm 1:10 tapered		

** Refer to specifications for performance data*
+ U seal cannot be used with needle bearings

MP Standard MP Series

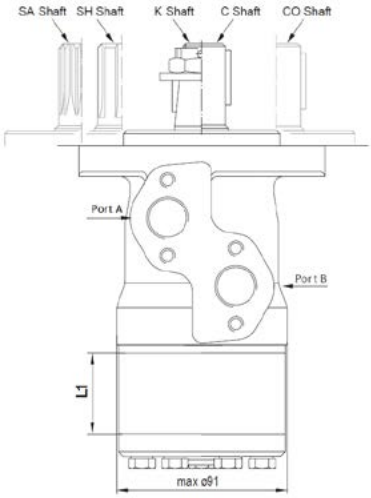

MPQ MPQ Series

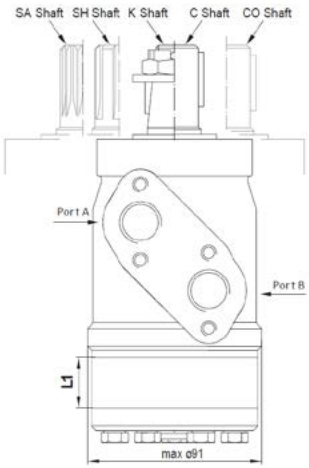

- Standard Mount SAE A 2-bolt

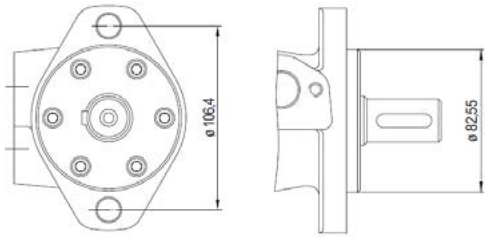

Q Q Mount M10 4-bolt

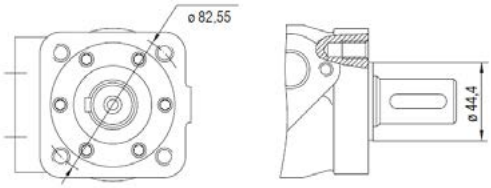

F Magneto Mount

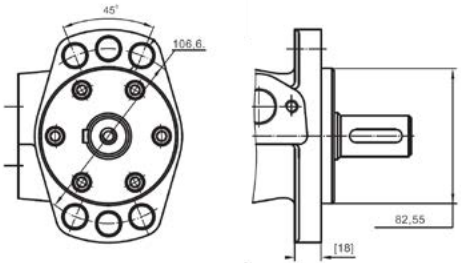

W Wheel Mount

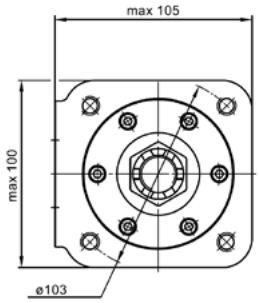

C 25mm Straight Keyed Shaft

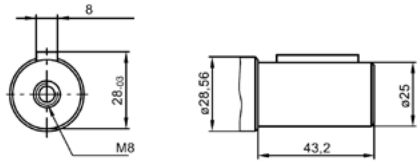

CB 32mm Straight Keyed Shaft

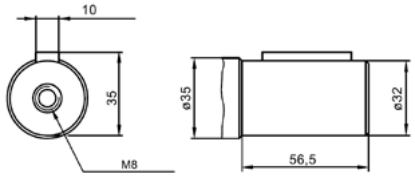

CO 1" Straight Keyed Shaft

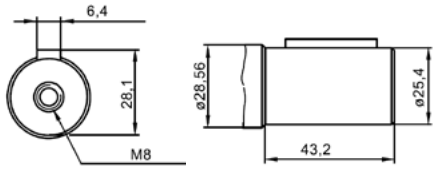

SH 1" 6B Splined Shaft

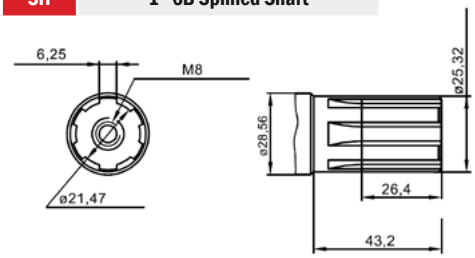

HB 1.1/4" 14T Splined Shaft

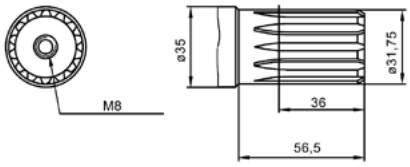

K 28.56mm 1:10 Tapered Shaft

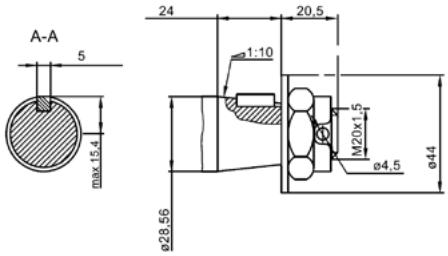

KB 35mm 1:10 Tapered Shaft

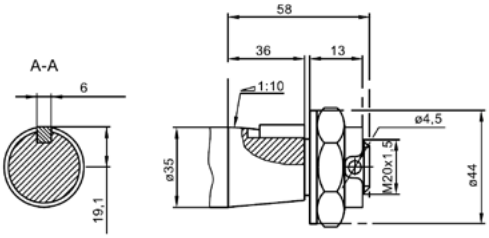

TECH DATA

MPYN Series Gerotor Motor

Standard Pricing: Shaft 1" Straight Keyed, Mount SAE A 2-bolt, Ports 1/2" BSPP, Case 1/4" BSPP, Needle Bearings, 200 bar Shaft Seal

Part #	DISPLACEMENT (cc)	ROTOR Width L1 (mm)	SPEED Max. Cont. (RPM)	FLOW Max. Cont. (L/min)	PRESSURE DROP Max. Cont. (Bar)	INLET PRESSURE Max. Cont. (Bar)	TORQUE Max. Cont. (Nm)	WEIGHT (Kg)	
MPYN 25	28.4	5.20	1400	40	115	200	43	6.1	NEW
MPYN 32	34.5	6.30	1440	50	115	200	52	6.1	NEW
MPYN 40	40.5	7.40	1480	60	115	200	62	6.2	NEW
MPYN 50	49.5	6.67	1210	60	160	200	107	6.3	NEW
MPYN 80	79.2	10.67	750	60	160	200	170	6.4	NEW
MPYN 100	99.0	13.33	600	60	160	200	212	6.6	NEW
MPYN 125	123.8	16.67	480	60	160	200	265	6.7	NEW
MPYN 160	158.4	21.33	375	60	160	200	338	6.9	NEW
MPYN 200	198.0	26.67	300	60	100	200	300	7.1	NEW
MPYN 250	247.5	33.33	240	60	90	200	300	7.3	NEW
MPYN 315	316.8	42.67	185	60	70	200	290	7.6	NEW
MPYN 400	396.0	53.33	155	60	55	200	290	8.2	NEW

To ensure best motor life, fill with fluid and run at moderate load for 5-10 minutes

Equivalent to:
N/A

M+S HYDRAULIC
MADE IN EUROPE

Seal Kits

Part #	Pressure Rating without Drain Line	
MPYN-SK	200 bar ≤200 RPM	NEW

Nomenclature

MP	PORTS		DISPLACEMENT	SHAFTS	
	Code	Description	25-400cc	Code	Description
	-	Side Ports		CO	1" straight keyed
	E	Rear Ports		C	25mm straight keyed
				K	28.56mm 1:10 tapered
				SH	1" 6B splined

MPYN Standard MPYN Series

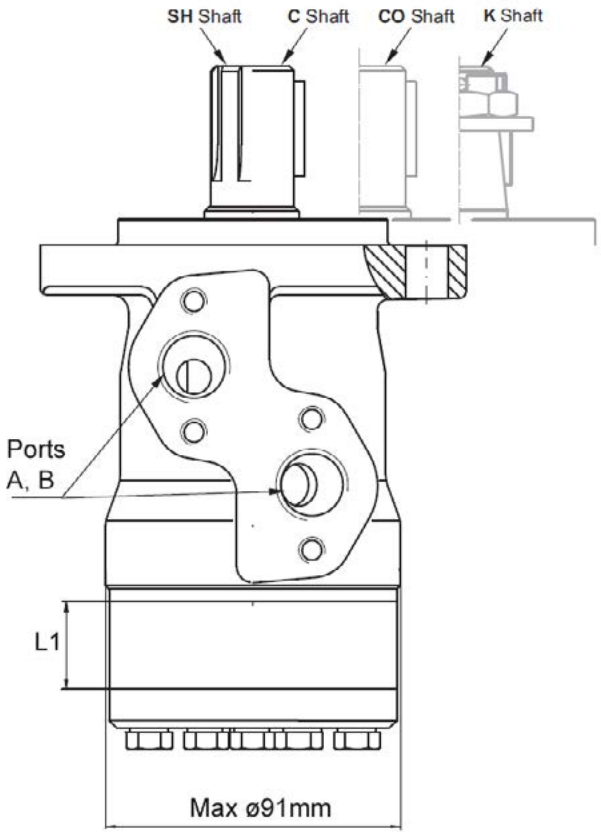

- Standard Mount SAE A 2-bolt

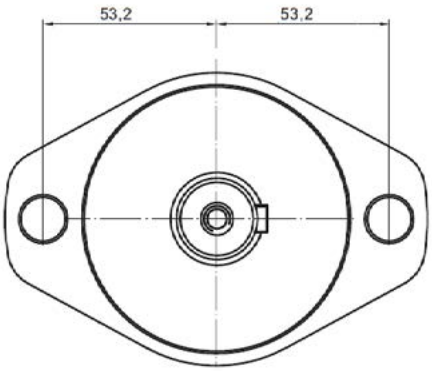

C 25mm Straight Keyed Shaft

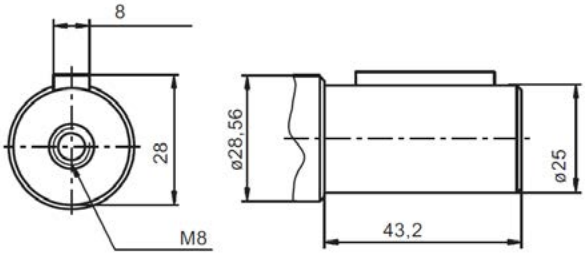

CO 1" Straight Keyed Shaft

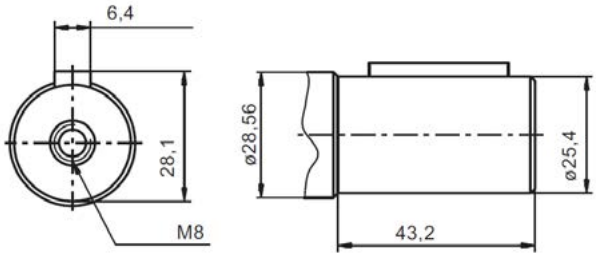

K 28.56 1:10 Tapered shaft

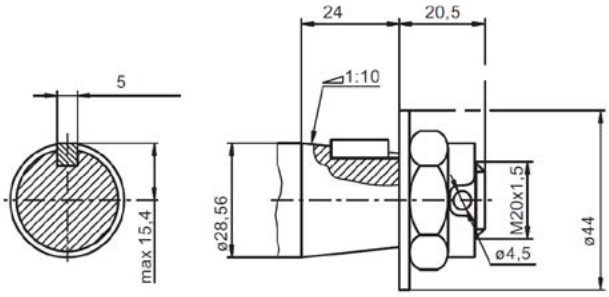

SH 1" 6B Splined Shaft

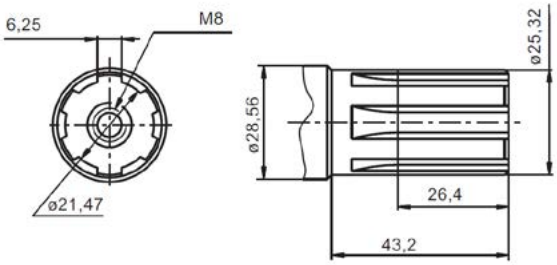

TECH DATA

MLHP Series Gerotor Motor

Standard Pricing: Shaft 1" Straight Keyed, Mount SAE A 2-bolt, Ports 7/8" UNF, Case 7/16" UNF

Part #	DISPLACEMENT	ROTOR	SPEED	FLOW	PRESSURE DROP	INLET PRESSURE	TORQUE	WEIGHT
	(cc)	Width L1 (mm)	Max. Cont. (RPM)	Max. Cont. (L/min)	Max. Cont. (Bar)	Max. Cont. (Bar)	Max. Cont. (Nm)	(Kg)
MLHP 25 CN4	28.4	5.2	1408	40	100	175	33	6.1
MLHP 32 CN4	34.5	6.3	1450	50	100	175	43	6.1
MLHP 40 CN4	40.5	7.4	1480	60	120	175	62	6.2
MLHP 50 CN4	49.5	6.67	1210	60	140	175	94	6.3
MLHP 60 CN4	59.5	8.25	983	60	140	175	110	6.3
MLHP 80 C4U	79.2	10.67	755	60	140	175	151	6.4
MLHP 100 C4U	99	13.33	605	60	140	175	193	6.6
MLHP 125 C4U	123.8	16.67	486	60	140	175	237	6.7
MLHP 160 C4U	158.4	21.33	378	60	140	175	313	6.9
MLHP 200 C4U	198	26.67	303	60	140	175	366	7.1
MLHP 250 C4U	247.5	33.33	242	60	110	175	380	7.3
MLHP 315 C4U	316.8	42.67	190	60	90	175	380	7.6
MLHP 400 C4U	396	53.33	150	60	70	175	360	8.2
MLHP 500 C4U	495	66.63	120	60	60	140	390	9.4
MLHP 630 C4U	623.6	84	95	60	55	140	440	10.1

- *CN (25-60cc) have needle bearings as standard*
- *To ensure best motor life, fill with fluid and run at moderate load for 5-10 minutes*

Equivalent to:
OMP (US) *Danfoss*

M+S HYDRAULIC
MADE IN EUROPE

Seal Kits

Part #	Pressure Rating without Drain Line
MLHP-SKD	150 bar ≤100 RPM
MLHPQ-SKD	150 bar ≤100 RPM
MLHP-SKU	200 bar ≤200 RPM
MLHPQ-SKU	200 bar ≤200 RPM

Nomenclature

MLHP	MOUNTING		DISP.	SHAFTS		OPTIONS		PORTS		SHAFT SEALS		Mac-
	Code	Description	25-630cc	Code	Description	Code	Desc.	Code	Desc.	Code	Desc.	Code
	-	SAE A 2-bolt 82.5mm spigot		C	1" straight keyed	N	Needle bearings	4	Side ports 7/8" UNF	U	200 bar *+	P-04D
	Q	Square 4-bolt 44.4mm spigot		H	1" straight cross hole 10.3mm hole			2	Side ports 1/2" BSPP	V	150 bar Viton *	P-08D
	F	Magneto 4-bolt 82.5mm spigot		G	1" 6B splined							

** Refer to specifications for performance data*
+ U seal cannot be used with needle bearings

MLHP Standard MLHP Series

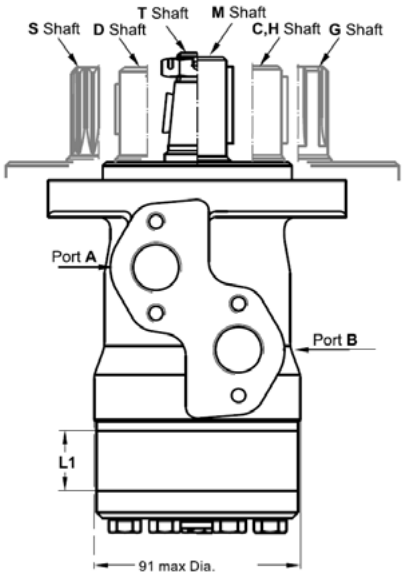

MLHPQ MLHPQ Series

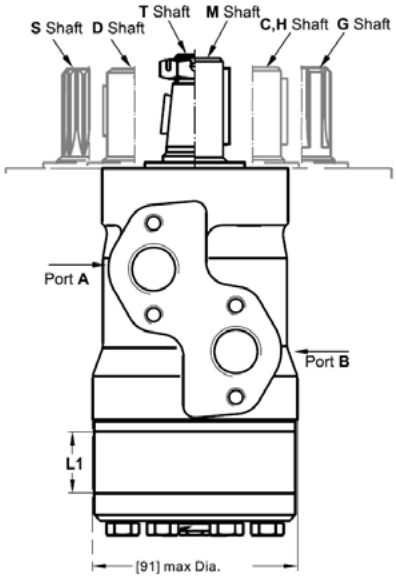

C 1" Straight Keyed Shaft

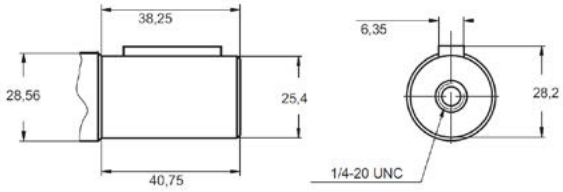

H 1" Straight Cross Hole 10.3mm

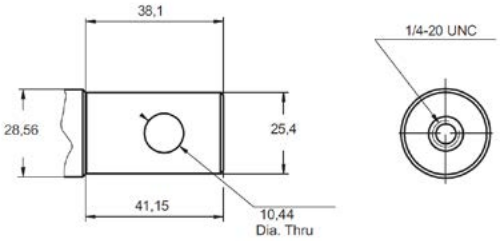

G 1" 6B Splined Shaft

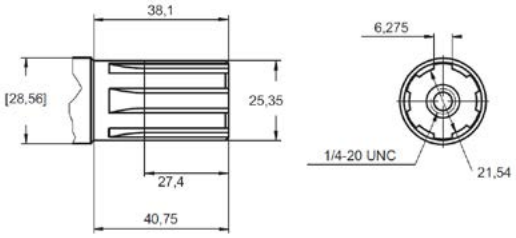

- Standard Mount SAE A 2-bolt

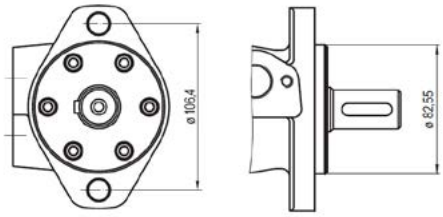

Q Q Mount 3/8" UNC 4-bolt

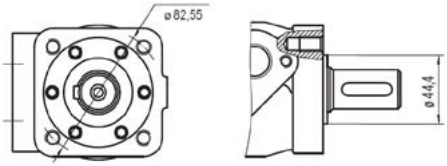

P-04D MACDON Mount 3/8" UNC 2-bolt

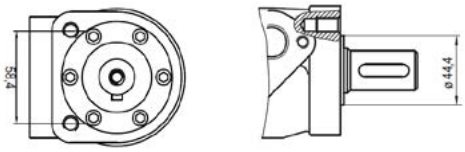

F Magneto 4-bolt Mount

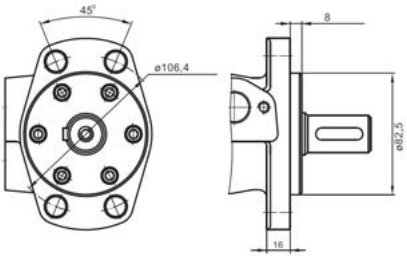

TECH DATA

HP Series Gerotor Motor

Standard Pricing: Shaft 1" Woodruff Keyed, Mount SAE A 2-bolt, Ports 7/8" UNF, Case 7/16" UNF

Part #	DISPLACEMENT	ROTOR	SPEED	FLOW	PRESSURE DROP	INLET PRESSURE	TORQUE	WEIGHT
	(cc)	Width L1 (mm)	Max. Cont. (RPM)	Max. Cont. (L/min)	Max. Cont. (Bar)	Max. Cont. (Bar)	Max. Cont. (Nm)	(Kg)
HP 25 C4U	28.4	5.2	1055	30	100	140	33	5.5
HP 32 C4U	34.5	6.3	1160	40	125	140	52	5.5
HP 40 C4U	40.5	7.4	900	40	125	140	65	5.6
HP 50 C4U	49.5	6.67	909	45	125	140	81	5.7
HP 60 C4U	59.5	8.25	858	50	125	140	89	5.7
HP 80 C4U	79.2	10.67	758	60	125	140	129	5.8
HP 100 C4U	99	13.33	606	60	125	140	162	6
HP 125 C4U	123.8	16.67	485	60	125	140	202	6.1
HP 160 C4U	158.4	21.33	379	60	115	140	238	6.3
HP 200 C4U	198	26.67	303	60	105	140	271	6.5
HP 250 C4U	247.5	33.33	242	60	100	140	323	6.7
HP 315 C4U	316.8	42.67	189	60	90	140	372	7
HP 400 C4U	396	53.33	152	60	80	140	414	7.5

To ensure best motor life, fill with fluid and run at moderate load for 5-10 minutes

Equivalent to:
BMPH *Hydnet*
BH *Brevini*
DH *Danfoss*
H-Series *Eaton Char Lynn*
TB *Parker*
MG *Ross/TRW*
WM(145) *White*

M+S HYDRAULIC
MADE IN EUROPE

Seal Kits

Part #	Pressure Rating without Drain Line
HPN-SKD	150 bar ≤100 RPM
HPQN-SKD	150 bar ≤100 RPM
HPQ-SKUE	200 bar ≤200 RPM
HP-SKUE	200 bar ≤200 RPM

Nomenclature

HP	MOUNTING		OPTIONS		DISP.	SHAFTS		PORTS		SHAFT SEALS	
	Code	Description	Code	Description	25-400cc	Code	Description	Code	Description	Code	Description
	-	SAE A 2-bolt 82.5mm spigot	N	Needle bearings		C	1" straight woodruff keyed	4	Side ports 7/8" UNF	U	200 bar *
	Q	Square 4-bolt 44.4mm spigot				CW	25mm straight keyed	1	Manifold ports	V	150 bar Viton *
						G	1" 6B splined				
						S	7/8" 13T splined				
						H	1" straight keyed 8mm cross hole				
						HE	1" straight keyed 10.3mm cross hole				
						TE	1" 1:8 tapered				

** Refer to specifications for performance data*

HP Standard HP Series

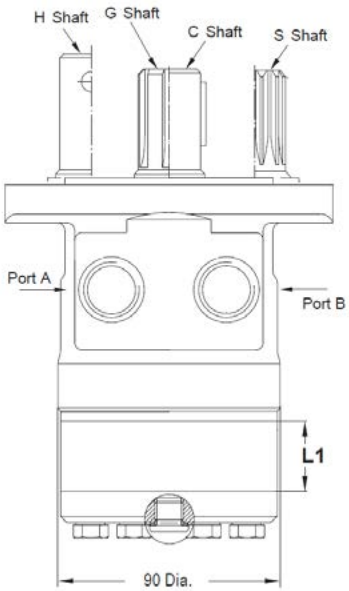

HPQ HPQ Series

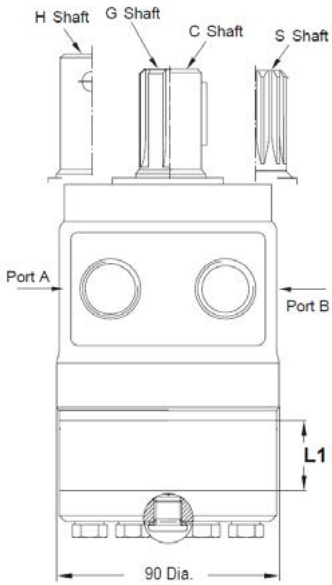

- Standard Mount SAE A 2-bolt

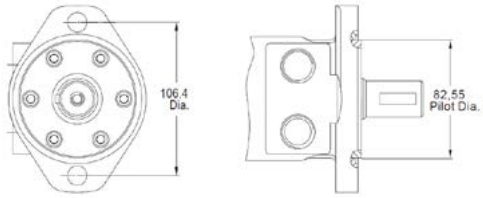

Q Q Mount 3/8" UNC 4-bolt

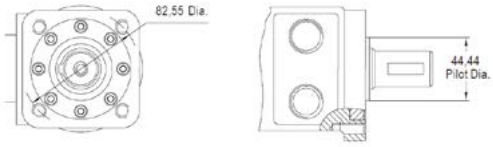

1 Manifold Ports

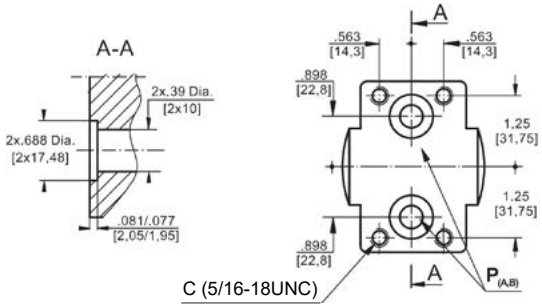

G 1" 6B Splined Shaft

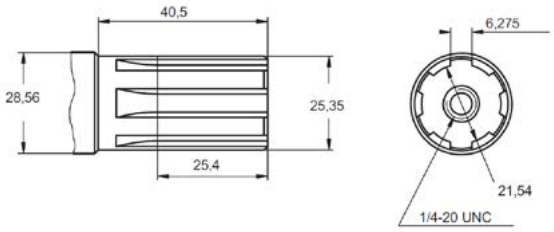

C 1" Straight Woodruff Keyed Shaft

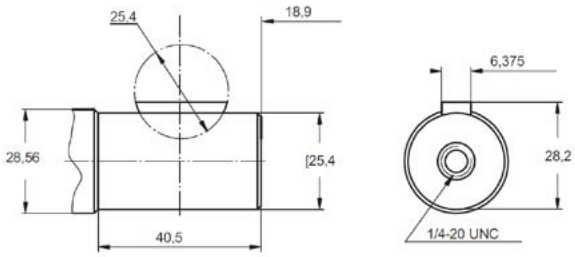

H 1" Keyed Shaft 8mm Cross Hole

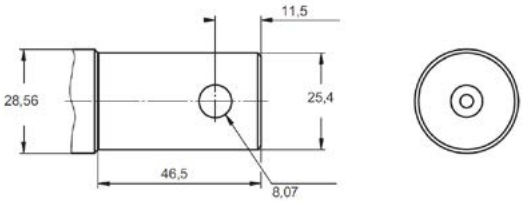

CW 25mm Straight Keyed Shaft

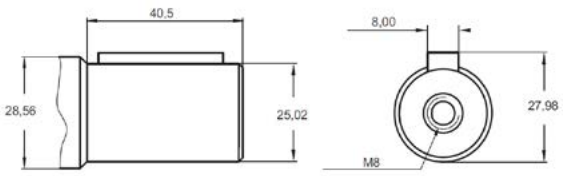

S 7/8" 13T Splined Shaft

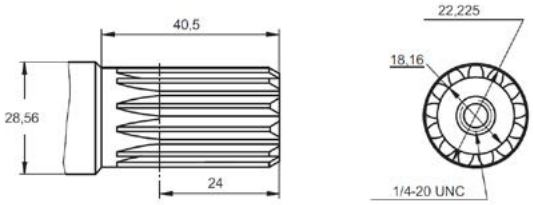

TECH DATA

PL Series Gerotor Motor

Standard Pricing: Shaft 1" Straight Keyed, Mount SAE A 4-bolt, Ports 1/2" BSPP, Case 1/4" BSPP, Needle Roller Bearings

Part #	DISPLACEMENT	ROTOR	SPEED	FLOW	PRESSURE DROP	INLET PRESSURE	TORQUE	WEIGHT
	(cc)	Width L1 (mm)	Max. Cont. (RPM)	Max. Cont. (L/min)	Max. Cont. (Bar)	Max. Cont. (Bar)	Max. Cont. (Nm)	(Kg)
PL 40 COU	40	7.4	1500	60	120	175	62	7
PL 50 COU	49.5	6.67	1210	60	140	175	94	7
PL 80 COU	79.2	10.67	755	60	140	175	151	7.1
PL 100 COU	99	13.33	605	60	140	175	193	7.2
PL 125 COU	123.8	16.67	485	60	140	175	237	7.4
PL 160 COU	158.4	21.33	378	60	140	175	313	7.6
PL 200 COU	198	26.67	303	60	140	175	366	7.8
PL 250 COU	247.5	33.33	242	60	140	175	470	8
PL 315 COU	316.8	42.67	190	60	120	175	486	8.3
PL 400 COU	396	53.33	150	60	95	175	500	8.6

To ensure best motor life, fill with fluid and run at moderate load for 5-10 minutes

Equivalent to:
TE *Parker*

M+S HYDRAULIC
MADE IN EUROPE

Seal Kits

Part #	Pressure Rating without Drain Line
PL-SKU	100 bar ≤100 RPM

Nomenclature

PL	MOUNTING		DISP.	SHAFTS		PORTS		SHAFT SEALS	
	Code	Description	40-400cc	Code	Description	Code	Description	Code	Description
	A	SAE A 2-bolt 82.5mm spigot		CO	1" straight keyed	-	1/2" BSPP	U	200 bar *
	Q	Square 4-bolt 44.4mm spigot		C	25mm straight keyed	4	7/8" UNF	V	100 bar viton *
	F	Magneto 4-bolt 82.5mm spigot		CB	32mm straight keyed				
	-	SAE A 4-bolt 82.55mm spigot		SH	1" 6B splined				
				HB	1.1/4" 14T splined				

** Refer to specifications for performance data*

PL Standard PL Series

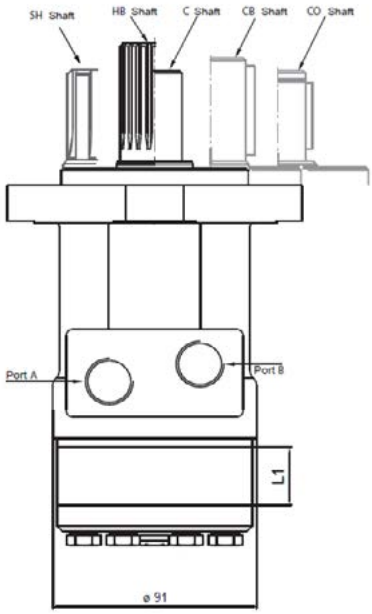

PLQ PLQ Series

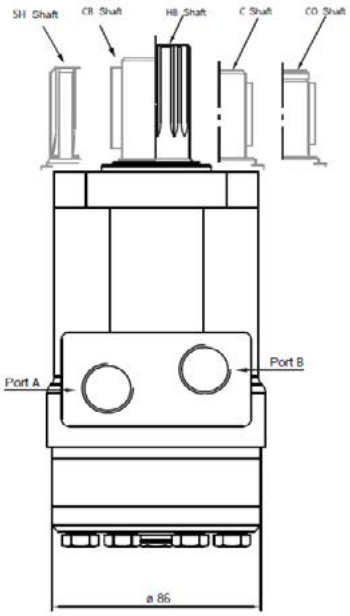

A A Mount SAE A 2-bolt

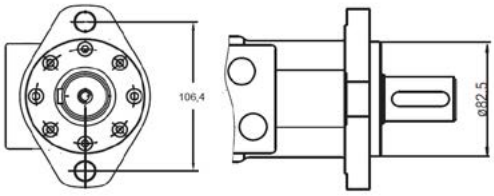

Q Q Mount 4-bolt

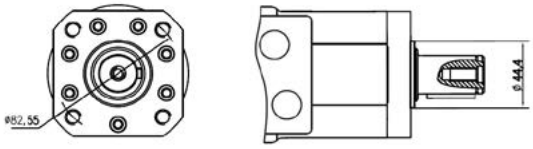

- Standard Mount SAE A 4-bolt

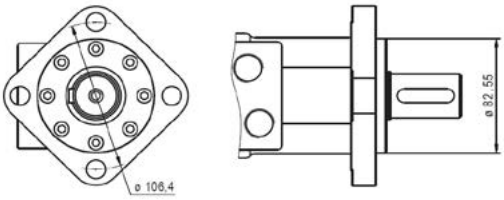

F Magneto 4-bolt Mount

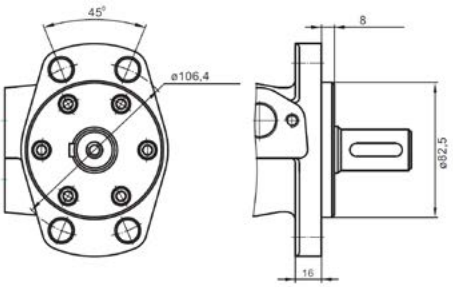

CO 1" Straight Keyed Shaft

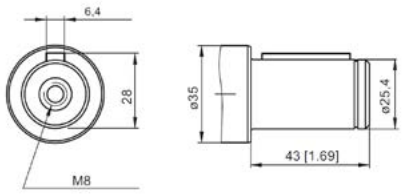

C 25mm Straight Keyed Shaft

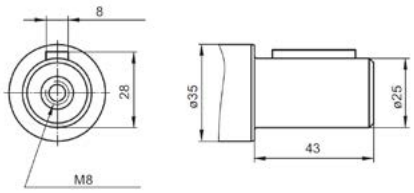

CB 32mm Straight Keyed Shaft

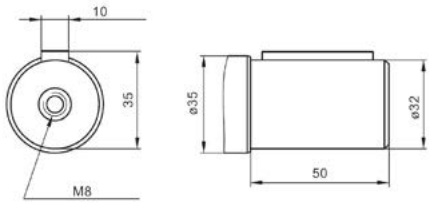

SH 1" 6B Splined Shaft

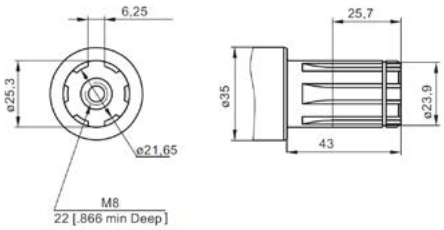

HB 1.1/4" 14T Splined Shaft

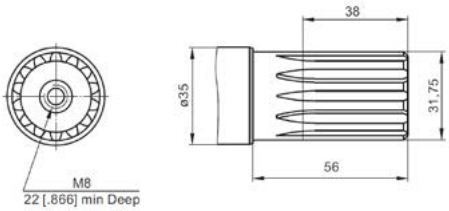

TECH DATA

MR Series Geroler Motor

Standard Pricing: Shaft 1" Straight Keyed, Mount SAE A 2-bolt, Ports 1/2" BSPP, Case 1/4" BSPP

Part #	DISPLACEMENT	ROTOR	SPEED	FLOW	PRESSURE DROP	INLET PRESSURE	TORQUE	WEIGHT
	(cc)	Width L1 (mm)	Max. Cont. (RPM)	Max. Cont. (L/min)	Max. Cont. (Bar)	Max. Cont. (Bar)	Max. Cont. (Nm)	(Kg)
MR 50 COD	51.5	9	775	40	140	175	100	7.2
MR 80 COD	80.3	14	750	60	175	175	200	7.4
MR 100 COD	99.8	17.4	600	60	175	175	240	7.6
MR 125 COD	125.7	21.8	475	60	175	175	300	7.9
MR 160 COD	159.6	27.8	375	60	175	175	390	8.3
MR 200 COD	199.8	34.8	300	60	140	175	385	8.6
MR 250 COD	250.1	43.5	240	60	110	175	390	9
MR 315 COD	315.7	54.8	190	60	85	175	360	9.5
MR 400 COD	397	69.4	150	60	65	175	380	10.3

To ensure best motor life, fill with fluid and run at moderate load for 5-10 minutes

Equivalent to:
BMR *Hydnet*
MGR/GMR *Bosch Rexroth*
BRE *Brevini*
OMR *Danfoss*
WR(255) *White*

M+S HYDRAULIC
MADE IN EUROPE

Seal Kits

Part #	Pressure Rating without Drain Line
MR-SKD	150 bar ≤100 RPM
MRQ-SKD	150 bar ≤100 RPM
MR-SKU	200 bar ≤200 RPM
MRQ-SKU	200 bar ≤200 RPM
MR-SKB	100 bar ≤100 RPM

Nomenclature

MR

MOUNTING		OPTIONS		DISP.
Code	Description	Code	Description	50-400cc
-	SAE A 2-bolt 82.5mm spigot	N	Needle bearings	
Q	Square 4-bolt 44.4mm spigot	E	Rear ports 1/2" BSPP	
F	Magneto 4-bolt 82.5mm spigot			

SHAFTS		SHAFT SEALS		SPEED SENSORS	
Code	Description	Code	Description	Code	Description
CO	1" straight keyed	D	150 bar *	RS SH	Speed sensor universal plug
C	25mm straight keyed	U	200 bar *	B/MR	Brake
CB	32mm straight keyed	V	150 bar viton *	T	Tacho connection
SH	1" 6B splined			RS SHL5	Speed sensor universal 5m lead
HB	1.1/4" 14T splined			ST	Electronic speed sensor
K	28.56mm 1:10 tapered				
KB	35mm 1:10 tapered				

** Refer to specifications for performance data*

MR Standard HP Series

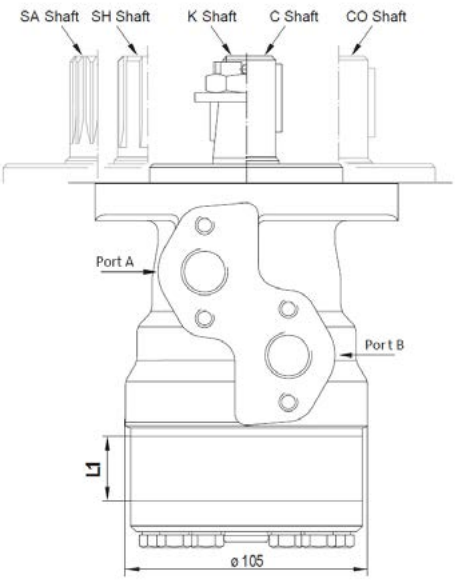

MRQ MRQ Series

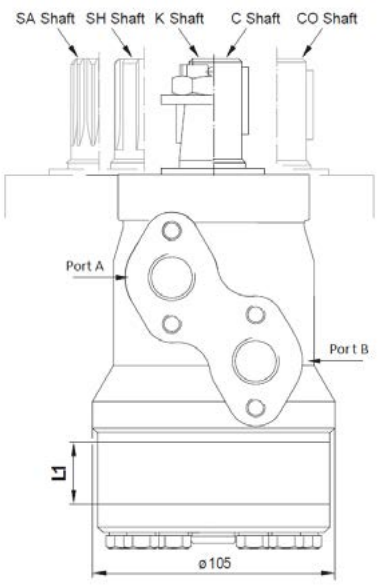

- Standard Mount SAE A 2-bolt

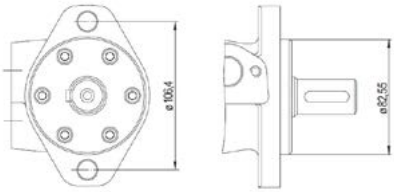

Q Q Mount M10 4-bolt

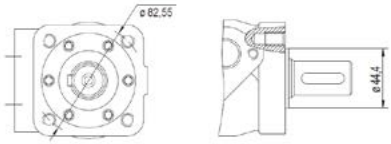

F Magneto 4-bolt Mount

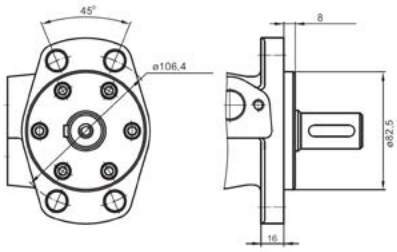

CO 1" Straight Keyed Shaft

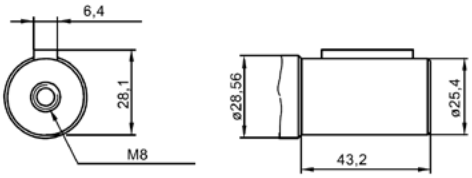

C 25mm Straight Keyed Shaft

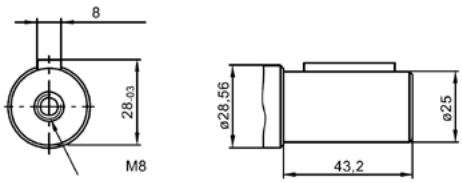

CB 32mm Straight Keyed Shaft

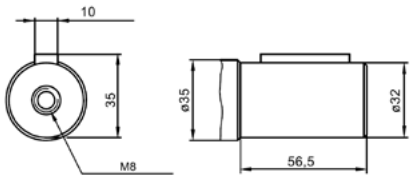

SH 1" 6B Splined Shaft

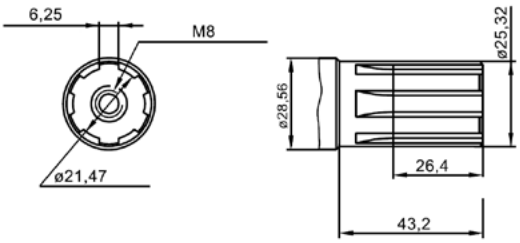

HB 1.1/4" 14T Splined Shaft

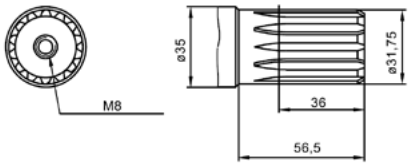

K 28.56mm 1:10 Tapered Shaft

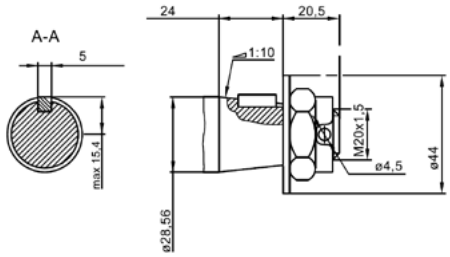

KB 35mm 1:10 Tapered Shaft

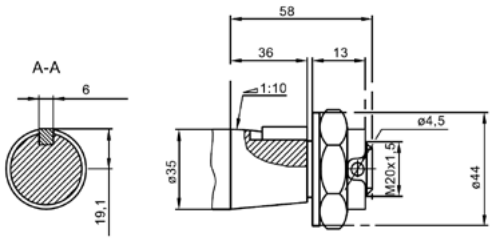

TECH DATA

MRYN Series Geroler Motor

Standard Pricing: Shaft 1" Straight Keyed, Mount SAE A 2-bolt, Ports 1/2" BSPP, Case 1/4" BSPP, Needle Bearings, 200 bar Shaft Seal

Part #	DISPLACEMENT (cc)	ROTOR Width L1 (mm)	SPEED Max. Cont. (RPM)	FLOW Max. Cont. (L/min)	PRESSURE DROP Max. Cont. (Bar)	INLET PRESSURE Max. Cont. (Bar)	TORQUE Max. Cont. (Nm)	WEIGHT (Kg)	
MRYN 50	51.5	9.0	775	40	150	200	100	7.2	NEW
MRYN 80	80.3	14.0	747	60	200	200	215	7.4	NEW
MRYN 100	99.8	17.4	600	60	200	200	275	7.6	NEW
MRYN 125	122.5	17.4	490	60	200	200	327	7.9	NEW
MRYN 160	153.6	21.8	390	60	180	200	375	8.3	NEW
MRYN 200	195.8	27.8	306	60	150	200	400	8.6	NEW
MRYN 250	245.0	34.8	245	60	125	200	400	9.0	NEW
MRYN 315	306.0	43.5	195	60	100	200	400	9.5	NEW
MRYN 400	386.0	54.8	155	60	80	200	400	10.3	NEW

To ensure best motor life, fill with fluid and run at moderate load for 5-10 minutes

Equivalent to:
n/a

M+S HYDRAULIC
MADE IN EUROPE

Seal Kits

Part #	Pressure Rating without Drain Line	
MRYN-SK	200 bar ≤200 RPM	NEW

Nomenclature

MRYN	PORTS		DISPLACEMENT	SHAFTS	
	Code	Description	50-400cc	Code	Description
	-	Side ports		CO	1" straight keyed
	E	Rear ports		C	25mm straight keyed
				K	28.56mm 1:10 tapered
				SH	1" 6B splined

MRYN Standard MRYN Series

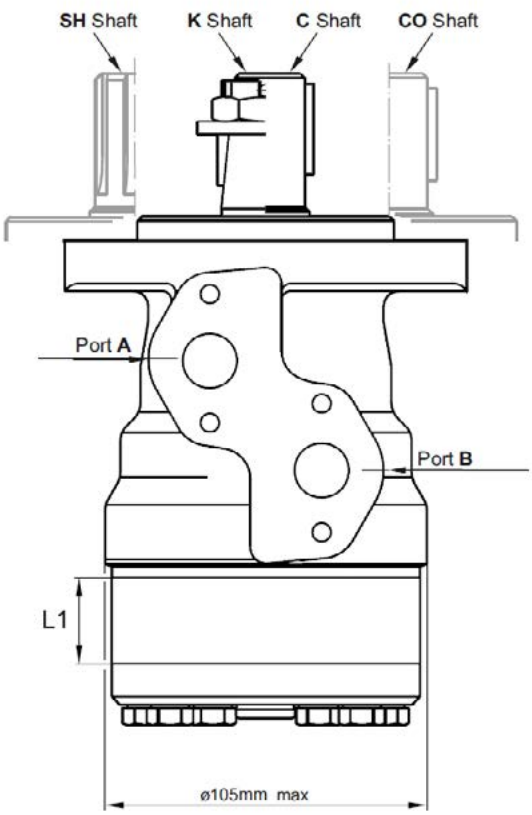

- Standard Mount SAE A 2-bolt

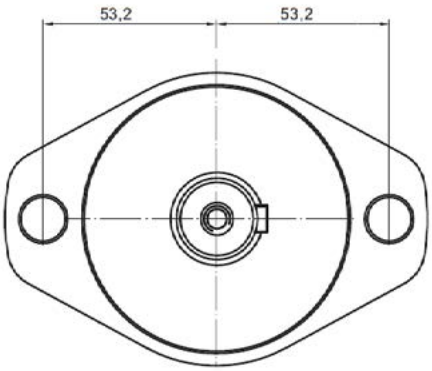

C 25mm Straight Keyed Shaft

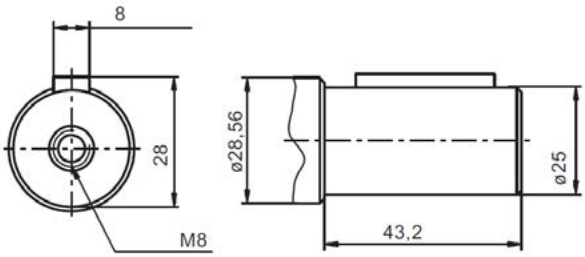

CO 1" Straight Keyed Shaft

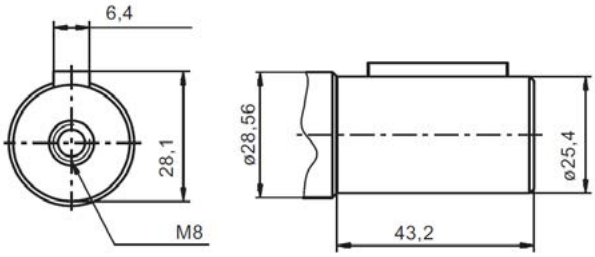

K 28.56 1:10 Tapered shaft

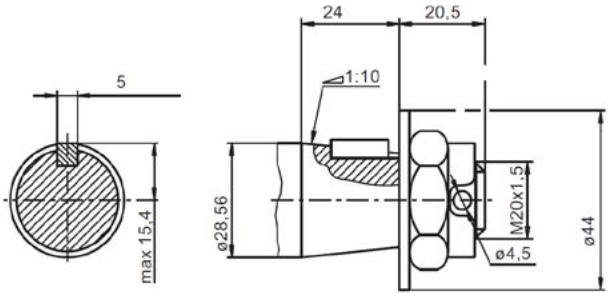

SH 1" 6B Splined Shaft

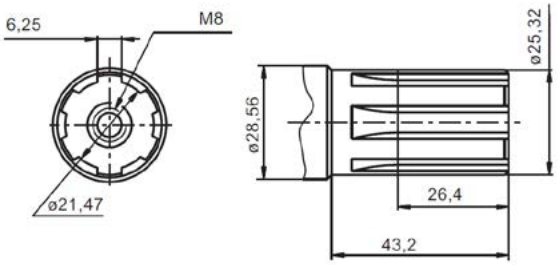

TECH DATA

MLHR Series Geroler Motor

Standard Pricing: Shaft 1" Straight Keyed, Mount SAE A 2-bolt, Ports 7/8" UNF, Case 7/16" UNF

Part #	DISPLACEMENT	ROTOR	SPEED	FLOW	PRESSURE DROP	INLET PRESSURE	TORQUE	WEIGHT
	(cc)	Width L1 (mm)	Max. Cont. (RPM)	Max. Cont. (L/min)	Max. Cont. (Bar)	Max. Cont. (Bar)	Max. Cont. (Nm)	(Kg)
MLHR 50 C4U	51.5	9	775	40	140	175	101	7.2
MLHR 80 C4U	80.3	14	750	60	175	175	195	7.4
MLHR 100 C4U	99.8	17.4	600	60	175	175	240	7.6
MLHR 125 C4U	125.7	21.8	475	60	175	175	300	7.9
MLHR 160 C4U	159.6	27.8	375	60	175	175	390	8.3
MLHR 200 C4U	199.8	34.8	300	60	140	175	385	8.6
MLHR 250 C4U	250.1	43.5	240	60	110	175	390	9
MLHR 315 C4U	315.7	54.8	190	60	90	175	390	9.5
MLHR 400 C4U	397	69.4	150	60	70	175	380	10.3

To ensure best motor life, fill with fluid and run at moderate load for 5-10 minutes

Equivalent to:
OMR(US) *Danfoss*

M+S HYDRAULIC
MADE IN EUROPE

Seal Kits

Part #	Pressure Rating without Drain Line
MLHR-SKD	150 bar ≤100 RPM
MLHRQ-SKD	150 bar ≤100 RPM
MLHR-SKU	200 bar ≤200 RPM
MLHRQ-SKU	200 bar ≤200 RPM
MLHRW-SKB	100 bar ≤100 RPM

Nomenclature

MLHR	MOUNTING		DISP.	SHAFTS		OPTIONS		PORTS		SHAFT SEALS	
	Code	Description	50-400cc	Code	Description	Code	Description	Code	Description	Code	Description
	-	SAE A 2-bolt 82.5mm spigot		C	1" straight keyed	N	Needle bearings	4	7/8" UNF	D	150 bar *
	Q	Square 4-bolt 44.4mm spigot		K	1.1/4" straight keyed			2	1/2" BSPP	U	200 bar *
	F	Magneto 4-bolt 82.5mm spigot		H	1" straight cross hole 10.5mm hole					UK	200 bar shaft seal + check valves *
	W	Wheel 4-bolt 82.5mm spigot		R	1.1/4" 1:8 Tapered						

** Refer to specifications for performance data*

MLHR MLHR/MLHRF Series

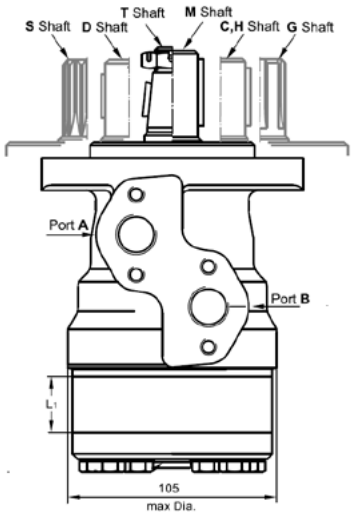

MLHRQ MLHRQ/MLHRM Series

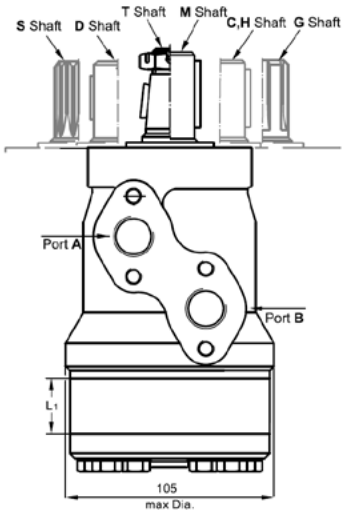

MLHRW MLHRW Series

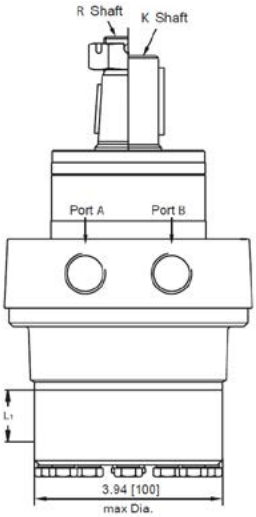

W Wheel Mount 4-bolt

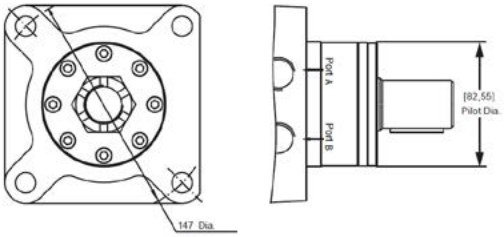

F Magneto Mount, Oval 4-bolt

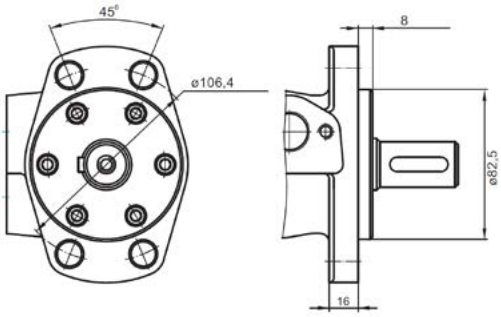

C 1" Straight Keyed Shaft

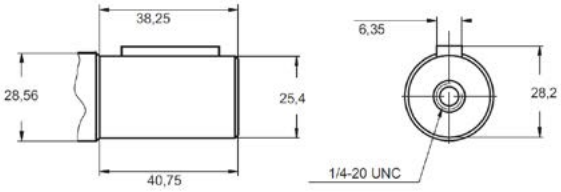

K 1.1/4" Straight Keyed Shaft

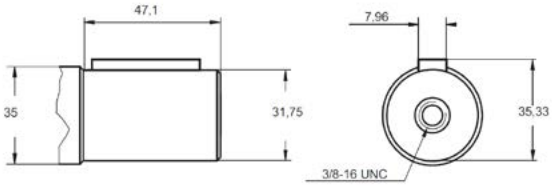

H 1" Straight 10.5mm Cross Hole

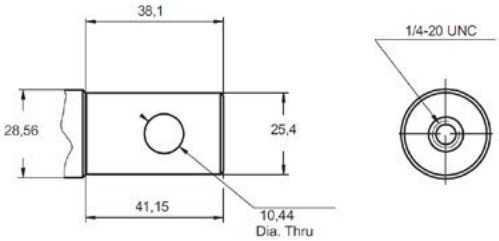

R 1.1/.4" 1:8 Tapered Shaft

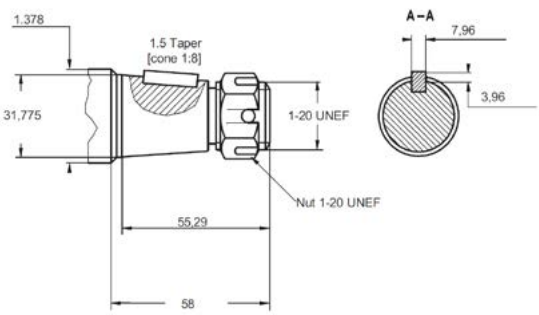

TECH DATA

HR Series Geroler Motor

Standard Pricing: Shaft 1" Woodruff Keyed, Mount SAE A 2-bolt, Ports 7/8" UNF, Case 7/16" UNF

Part #	DISPLACEMENT	ROTOR	SPEED	FLOW	PRESSURE DROP	INLET PRESSURE	TORQUE	WEIGHT
	(cc)	Width L1 (mm)	Max. Cont. (RPM)	Max. Cont. (L/min)	Max. Cont. (Bar)	Max. Cont. (Bar)	Max. Cont. (Nm)	(Kg)
HR 50 C4U	51.5	9	777	40	140	140	98	6.6
HR 80 C4U	80.3	14	747	60	140	140	160	6.7
HR 100 C4U	99.8	17.4	601	60	140	140	195	7
HR 125 C4U	122.5	17.4	490	60	140	140	240	7.1
HR 160 C4U	153.6	21.8	391	60	140	140	300	7.3
HR 200 C4U	195.8	27.8	306	60	130	140	350	7.8
HR 250 C4U	245	34.8	245	60	110	140	370	8.2
HR 315 C4U	306	43.5	196	60	100	140	420	8.9
HR 400 C4U	386	54.8	155	60	85	140	450	9.6

To ensure best motor life, fill with fluid and run at moderate load for 5-10 minutes

Equivalent to:
BMRS *Hydnet*
BS *Brevini*
DS *Danfoss*
S,T Series *Eaton Char Lynn*
WG *White*

M+S HYDRAULIC
MADE IN EUROPE

Seal Kits

Part #	Pressure Rating without Drain Line
HRN-SKD	150 bar ≤100 RPM
HRQN-SKD	150 bar ≤100 RPM
HRQ-SKUE	200 bar ≤200 RPM
HR-SKUE	200 bar ≤200 RPM

Nomenclature

HR

MOUNTING		OPTIONS		DISP.
Code	Description	Code	Description	50-400cc
-	SAE A 2-bolt 82.5mm spigot	N	Needle bearings	
Q	Square 4-bolt 44.4mm spigot			

SHAFTS	
Code	Description
C	1" straight woodruff keyed
CW	25mm straight keyed
G	1" SAE 6B splined
S	7/8" 13T splined
H	1" straight keyed 8mm cross hole
HPE	1" straight keyed 10.3mm cross hole
TE	1" 1:8 tapered

PORTS	
Code	Description
4	Side ports 7/8" UNF
1	Manifold ports

SHAFT SEALS	
Code	Description
U	200 bar *
V	150 bar viton *

** Refer to specifications for performance data*

HR Standard HR Series

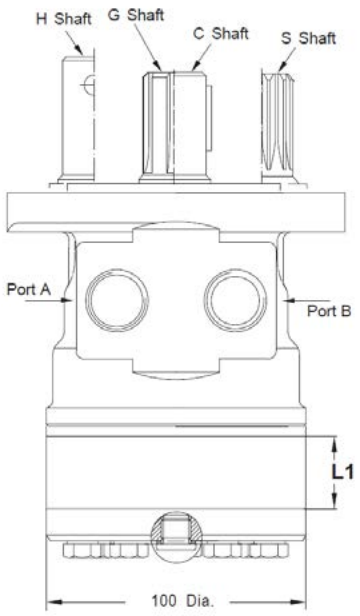

HRQ HRQ Series

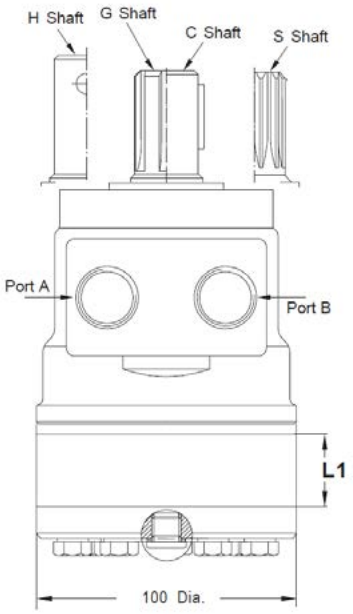

C 1" Straight Woodruff Keyed Shaft

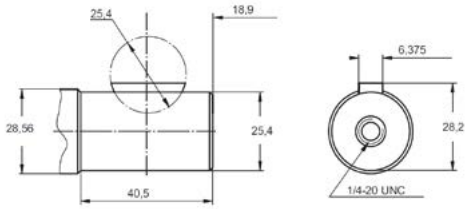

CW 25mm Straight Keyed Shaft

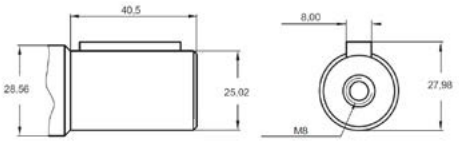

G 1" SAE 6B Splined Shaft

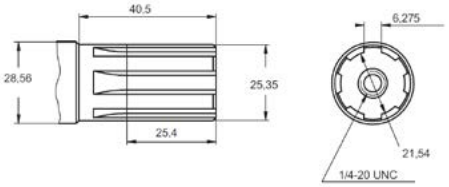

- Standard Mount SAE A 2-bolt

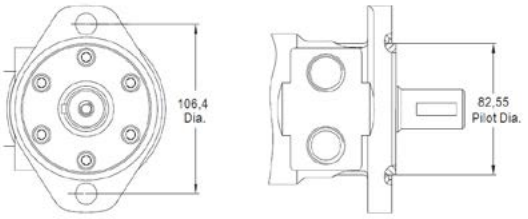

H 1" Straight Keyed 8mm Cross Hole

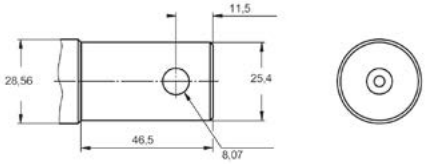

Q Q Mount 3/8" UNC 4-bolt

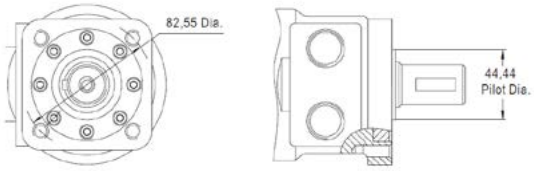

S 7/8" 13T Splined Shaft

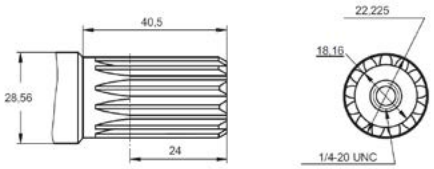

1 Manifold Ports

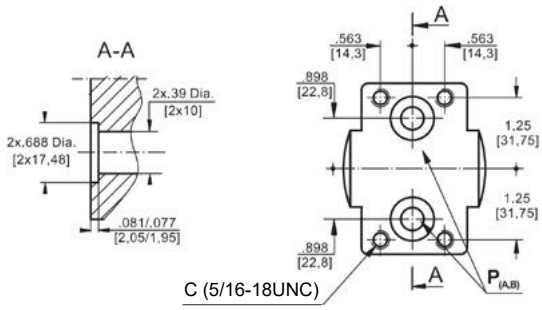

TECH DATA

RL Series Geroler Motor

Standard Pricing: Shaft 1" Straight Keyed, Mount SAE A 4-bolt, Ports 1/2" BSPP, Case 1/4" BSPP, Needle Roller Bearings

Part #	DISPLACEMENT	ROTOR	SPEED	FLOW	PRESSURE DROP	INLET PRESSURE	TORQUE	WEIGHT
	(cc)	Width L1 (mm)	Max. Cont. (RPM)	Max. Cont. (L/min)	Max. Cont. (Bar)	Max. Cont. (Bar)	Max. Cont. (Nm)	(Kg)
RL 50 COU	51.5	9	775	40	140	175	100	8.5
RL 80 COU	80.3	14	750	60	175	175	195	8.6
RL 100 COU	99.8	17.4	600	60	175	175	240	8.9
RL 125 COU	125.7	21.8	475	60	175	175	300	9
RL 160 COU	159.6	27.8	375	60	175	175	380	9.2
RL 200 COU	199.8	34.8	300	60	175	175	450	9.6
RL 250 COU	250.1	43.5	240	60	175	175	540	10.1
RL 315 COU	315.7	54.8	190	60	135	175	550	10.8
RL 400 COU	397	69.4	150	60	110	175	610	11.5

To ensure best motor life, fill with fluid and run at moderate load for 5-10 minutes

Equivalent to:
TE *Parker*
MB *Ross/TRW*
RS(200) *White*

M+S HYDRAULIC
MADE IN EUROPE

Seal Kits

Part #	Pressure Rating without Drain Line
RL-SKU	100 bar ≤100 RPM

Nomenclature

RL

MOUNTING		DISP.	SHAFTS		PORTS		SHAFT SEALS	
Code	Description	50-400cc	Code	Description	Code	Description	Code	Description
A	SAE A 2-bolt 82.5mm spigot		CO	1" straight keyed	-	1/2" BSPP	U	200 bar *
Q	Square 4-bolt 44.4mm spigot		C	25mm straight keyed	4	7/8" UNF	V	100 bar viton *
F	Magneto 4-bolt 82.5mm spigot		CB	32mm straight keyed				
-	SAE A 4-bolt 82.5mm spigot		SH	1" 6B splined				
			HB	1.1/4" 14T splined				
			KB	35mm 1:10 tapered				

** Refer to specifications for performance data*

RL Standard RL Series

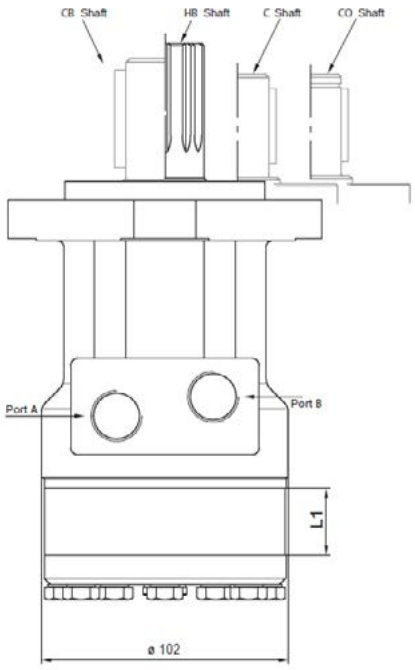

RLQ RLQ Series

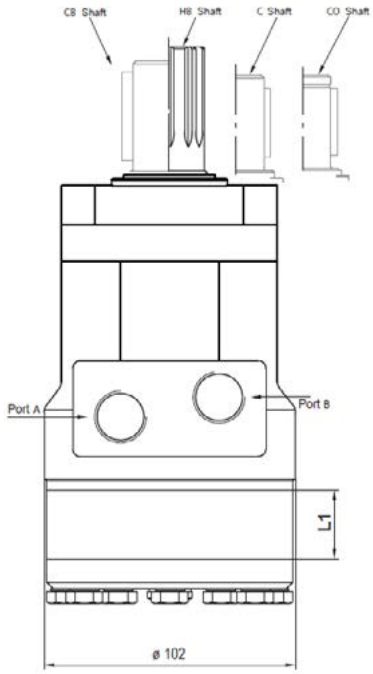

A A Mount SAE A 2-bolt

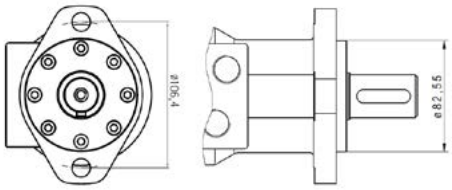

Q Q Mount M10 4-bolt

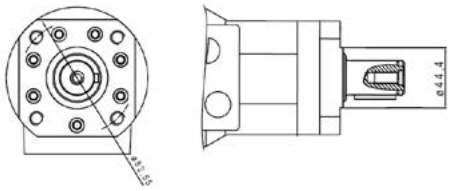

- Standard Mount SAE A 4-bolt

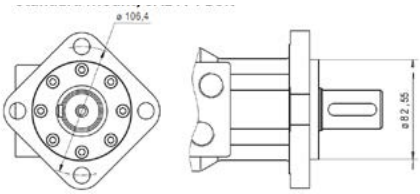

F Magneto Mount 4-bolt

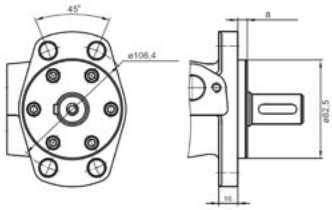

CO 1" Straight Keyed Shaft

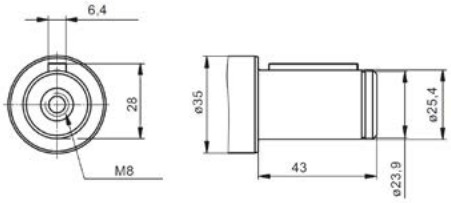

C 25mm Straight Keyed Shaft

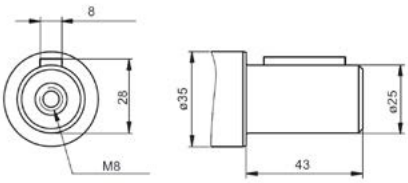

CB 32mm Straight Keyed Shaft

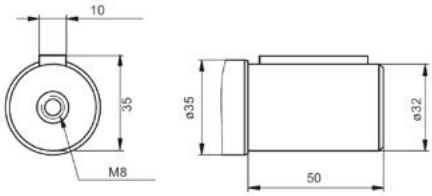

HB 1.1/4" 14T Splined Shaft

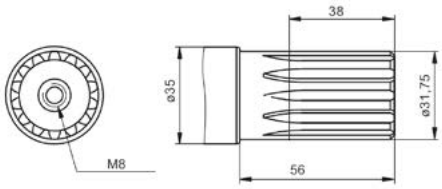

SH 1" 6B Splined Shaft

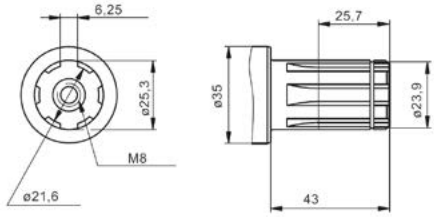

KB 35mm 1:10 Tapered Shaft

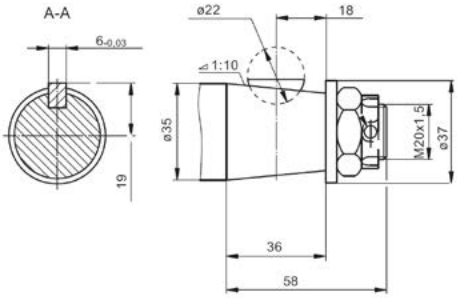

TECH DATA

MH Series Geroler Motor

Standard Pricing: Shaft 32mm Straight Keyed, Mount Magneto 4-bolt, Ports 1/2" BSPP, Case 1/4" BSPP

Part #	DISPLACEMENT	ROTOR	SPEED	FLOW	PRESSURE DROP	INLET PRESSURE	TORQUE	WEIGHT
	(cc)	Width L1 (mm)	Max. Cont. (RPM)	Max. Cont. (L/min)	Max. Cont. (Bar)	Max. Cont. (Bar)	Max. Cont. (Nm)	(Kg)
MH 200 CU	201.3	27.8	370	75	175	200	510	10.5
MH 250 CU	252	34.8	295	75	175	200	610	11
MH 315 CU	314.9	43.5	235	75	175	200	740	11.5
MH 400 CU	396.8	54.8	185	75	155	200	840	12.3
MH 500 CU	502.4	69.4	150	75	125	200	820	13

To ensure best motor life, fill with fluid and run at moderate load for 5-10 minutes

Equivalent to:
OMH *Danfoss*

M+S HYDRAULIC
MADE IN EUROPE

Seal Kits

Part #	Pressure Rating without Drain Line
MH-SKD	100 bar ≤100 RPM
MH-SKU	150 bar ≤200 RPM

Nomenclature

MH	MOUNTING		DISP.	SHAFTS		PORTS		SHAFT SEALS	
	Code	Description	200-500cc	Code	Description	Code	Description	Code	Description
	-	Magneto 4-bolt 82.5mm spigot		C	32mm straight keyed	-	Side ports 1/2" BSPP	U	150 bar *
				CB	35mm straight keyed	*	Side ports 7/8" UNF		* Refer to specifications for performance data
				SH	1.1/4" 14T splined		* Contact office		
				K	35mm 1:10 tapered				

MH Standard MH Series

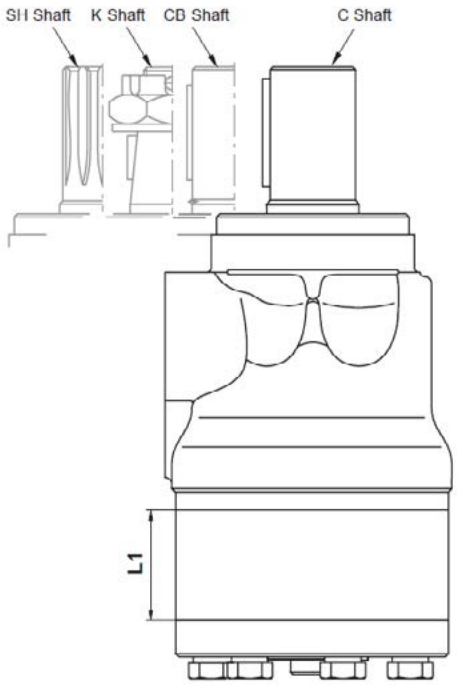

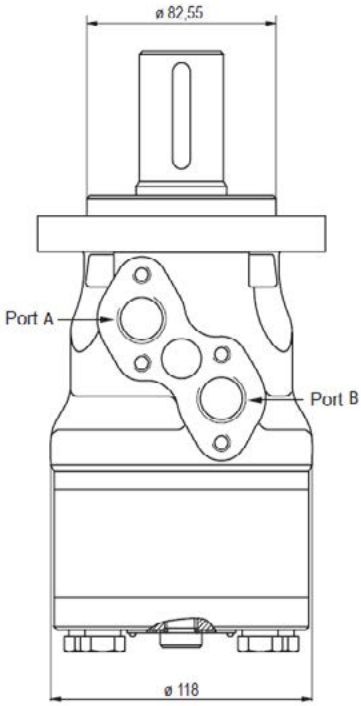

- Magneto 4-bolt Mount

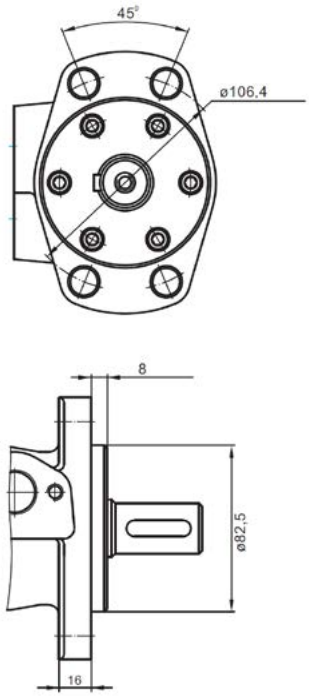

C 32mm Straight Keyed Shaft

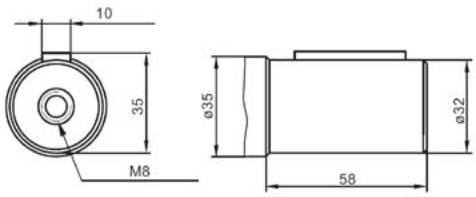

CB 35mm Straight Keyed Shaft

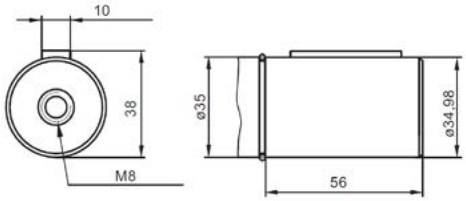

SH 1.1/4" 14T Splined Shaft

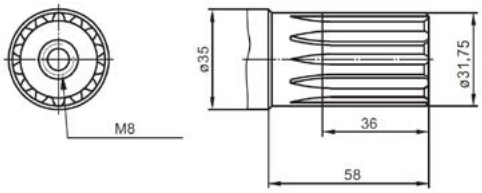

K 35mm 1:10 Tapered Shaft

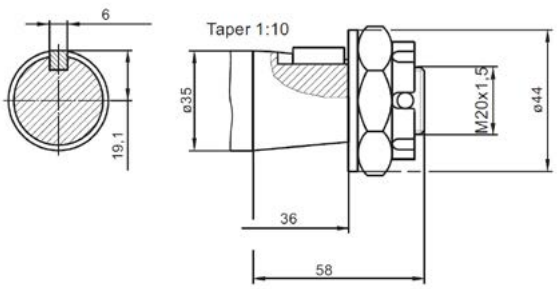

TECH DATA

MLHH Series Geroler Motor

Standard Pricing: Shaft 1.1/4" Straight Keyed, Mount Magneto 4-bolt, Ports 7/8"-14 UNF, Case 7/16" BSPP

Part #	DISPLACEMENT	ROTOR	SPEED	FLOW	PRESSURE DROP	INLET PRESSURE	TORQUE	WEIGHT
	(cc)	Width L1 (mm)	Max. Cont. (RPM)	Max. Cont. (L/min)	Max. Cont. (Bar)	Max. Cont. (Bar)	Max. Cont. (Nm)	(Kg)
MLHH 200 K4U	201.3	27.8	370	75	175	200	510	10.5
MLHH 250 K4U	252.0	34.8	295	75	175	200	610	11.0
MLHH 315 K4U	314.9	43.5	235	75	175	200	740	11.5
MLHH 400 K4U	396.8	54.8	185	75	155	200	840	12.3
MLHH 500 K4U	502.4	69.4	150	75	120	200	820	13.0

To ensure best motor life, fill with fluid and run at moderate load for 5-10 minutes

Equivalent to:
N/A

M+S HYDRAULIC
MADE IN EUROPE

Seal Kits

Part #	Pressure Rating without Drain Line
MH-SKD	100 bar ≤100 RPM
MH-SKU	150 bar ≤200 RPM

Nomenclature

MLHH	MOUNTING		DISP.	SHAFTS		PORTS		SHAFT SEALS	
	Code	Description	200-500cc	Code	Description	Code	Description	Code	Description
	-	Magneto 4-bolt		K	1.1/4" straight keyed	4	7/8-14 UNF	U	150 bar *
				L	1.1/4" 14T splined				

** Refer to specifications for performance data*

MLHH Standard ML Series

- Magneto 4-bolt Mount

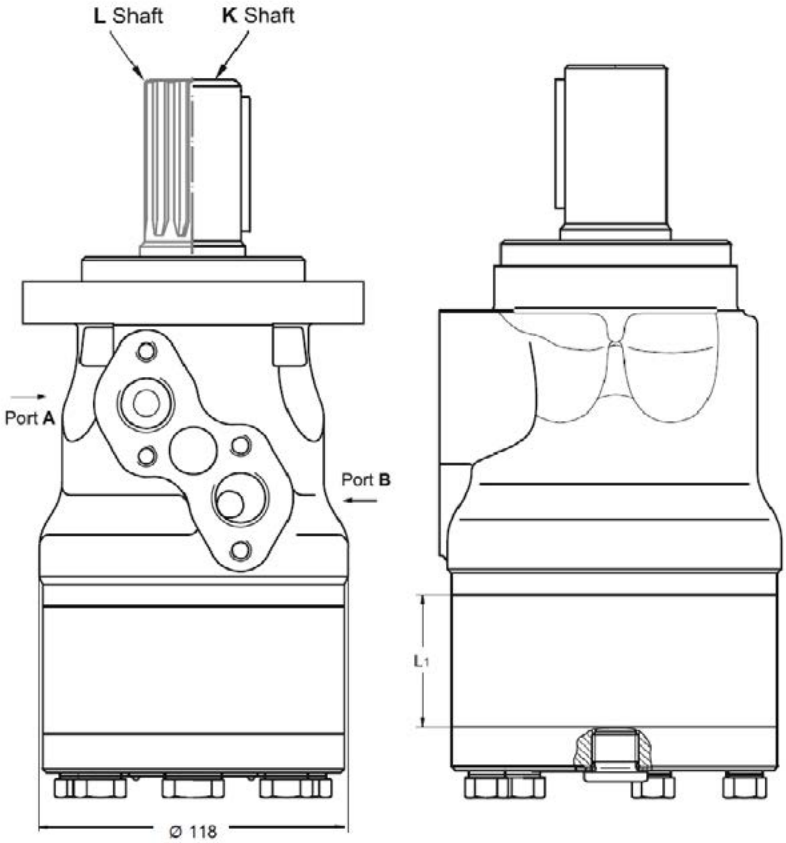

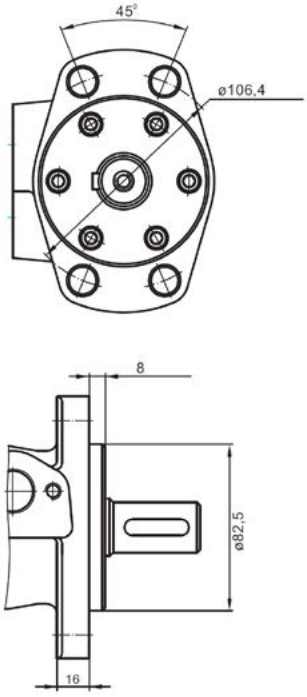

K 1.1/4" Straight Keyed Shaft

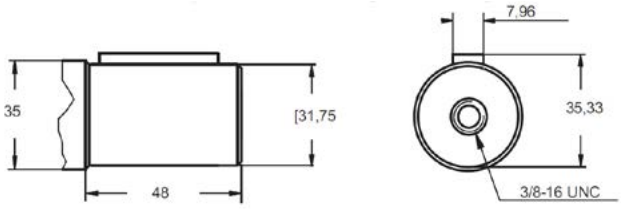

L 1.1/4" 14T Splined Shaft

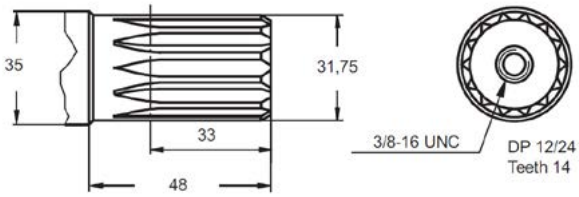

TECH DATA

RW Series Geroler Motor

Standard Pricing: Shaft 35mm 1:10 Taper, Mount Wheel 4-bolt, Ports 1/2" BSPP, Case 1/4" BSPP

Part #	DISPLACEMENT	ROTOR	SPEED	FLOW	PRESSURE DROP	INLET PRESSURE	TORQUE	WEIGHT
	(cc)	Width L1 (mm)	Max. Cont. (RPM)	Max. Cont. (L/min)	Max. Cont. (Bar)	Max. Cont. (Bar)	Max. Cont. (Nm)	(Kg)
RW 50 KB	51.5	9	775	40	140	175	100	9.6
RW 80 KB	80.3	14	750	60	175	175	200	9.7
RW 100 KB	99.8	17.4	600	60	175	175	240	9.8
RW 125 KB	125.7	21.8	475	60	175	175	300	10
RW 160 KB	159.6	27.8	375	60	175	175	390	10.3
RW 200 KB	199.8	34.8	300	60	175	175	450	10.8
RW 250 KB	250.1	43.5	300	75	175	175	540	11.3
RW 315 KB	315.7	54.8	240	75	135	175	550	11.8
RW 400 KB	397	69.4	190	75	110	175	610	12.5

To ensure best motor life, fill with fluid and run at moderate load for 5-10 minutes

Equivalent to:
MGRW *Bosch Rexroth*
OMEW *Danfoss*

M+S HYDRAULIC
MADE IN EUROPE

Seal Kits

Part #	Pressure Rating without Drain Line
RW-SKU	200 bar ≤150 RPM

Nomenclature

RW	DISPLACEMENT	SHAFTS		PORTS		SHAFT SEALS	
	50-400cc	Code	Description	Code	Description	Code	Description
		KB	35mm 1:10 tapered	-	Side ports 1/2" BSPP	UK	200 bar shaft seal check valves *
		CB	32mm straight keyed	-	For UNF ports, see MLHRW model		* Refer to specifications for performance data
		OB	1.1/4" 1:8 taper				

RW Standard RW Series

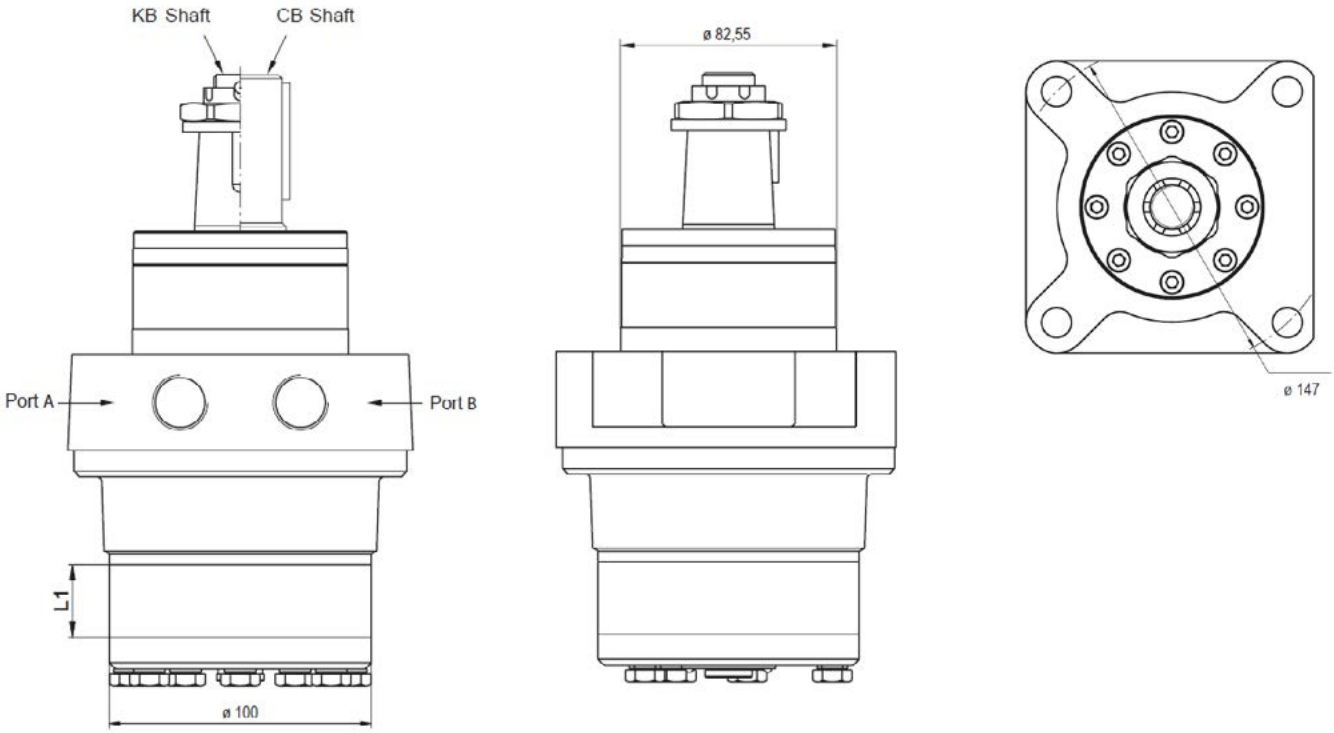

CB 32mm Straight Keyed Shaft

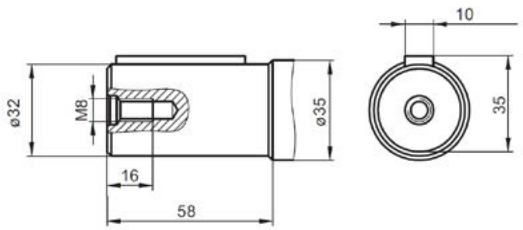

KB 35mm 1:10 Tapered Shaft

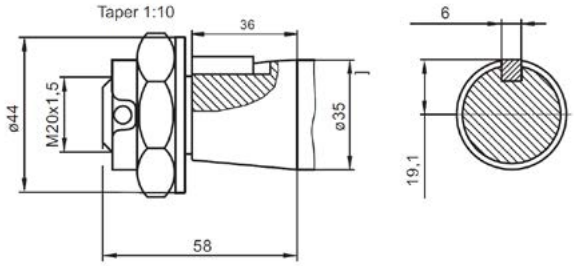

OB 1.1/4" 1:8 Tapered Shaft

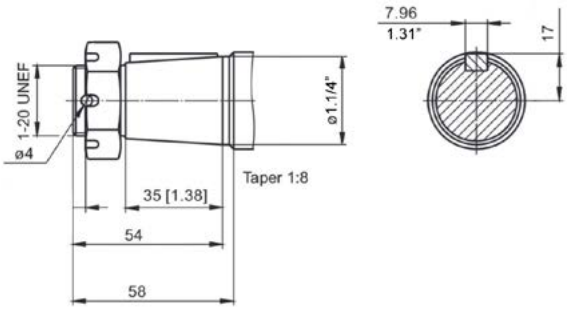

TECH DATA

HW Series Geroler Motor

Standard Pricing: Shaft 1.1/4" Straight Keyed, Mount Wheel 4-bolt, Ports 7/8" UNF, Case 7/16" UNF

Part #	DISPLACEMENT	ROTOR	SPEED	FLOW	PRESSURE DROP	INLET PRESSURE	TORQUE	WEIGHT	
	(cc)	Width L1 (mm)	Max. Cont. (RPM)	Max. Cont. (L/min)	Max. Cont. (Bar)	Max. Cont. (Bar)	Max. Cont. (Nm)	(Kg)	
HWS 80 K4	79.7	134	565	45	175	200	188	14.1	NEW
HWS 100 K4	101.4	137	445	45	175	200	240	14.2	NEW
HWS 125 K4	126	17.4	357	45	205	210	350	14.5	
HWS 160 K4	157.8	21.8	380	60	205	210	440	15	
HWS 200 K4	201.3	27.8	373	75	205	210	550	15.5	
HWS 235 K4	235.3	32.5	319	75	205	210	645	16	
HWS 250 K4	252	34.8	298	75	205	210	690	16	
HWS 300 K4	300	41.4	250	75	205	210	810	16.5	
HWS 315 K4	314.9	43.5	238	75	205	210	850	16.5	
HWS 350 K4	347.8	48	216	75	205	210	940	17	
HWS 370 K4	369.2	51	203	75	200	210	960	17	
HWS 400 K4	396.8	54.8	189	75	185	210	960	17.5	
HWS 470 K4	470.6	65	159	75	150	210	920	18.3	
HWS 500 K4	502.4	69.4	149	75	140	210	910	18.6	
HWS 535 K4	535	74.1	140	75	130	210	900	19	
HWS 550 K4	550	76	136	75	125	210	890	19.1	
HWS 600 K4	598.8	82.6	125	75	115	210	910	20.1	
HWS 750 K4	753.8	227.5	99	75	95	210	920	21.9	NEW

To ensure best motor life, fill with fluid and run at moderate load for 5-10 minutes

Equivalent to:
TG *Parker*
RE(500) *White*

M+S HYDRAULIC
MADE IN EUROPE

Seal Kits

Part #	Pressure Rating without Drain Line
HW-SK	150 bar ≤70 RPM

Nomenclature

HW	MOUNTING		DISP.	SHAFTS		PORTS		SHAFT SEALS	
	Code	Description	80-750cc	Code	Description	Code	Description	Code	Description
	S	Wheel mount 82.55mm spigot		CO	25mm straight keyed	4	Side ports 7/8" UNF	V	150 bar viton *
	F	Magneto 6-bolt 82.55mm spigot		CO1	1" straight keyed				
				SH	1" 6B splined				
				R	1.1/4" 1:8 tapered				
				RG	1.3/8" 1:8 tapered				
				T	1.1/2" 1:8 tapered				
				L	1.1/4" 14T splined				
				K	1.1/4" straight keyed				
				KB	35mm 1:10 tapered				
				M	32mm straight keyed				
				H	1.3/8" straight keyed				

** Refer to specifications for performance data*

HWS Dingo Design Wheel Mount

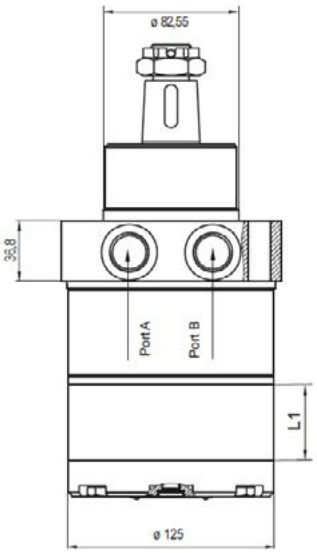

HWF Magneto Mount

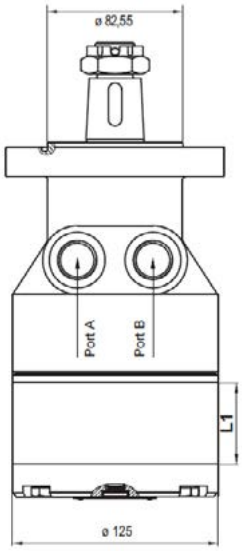

S Wheel Mount 4-bolt

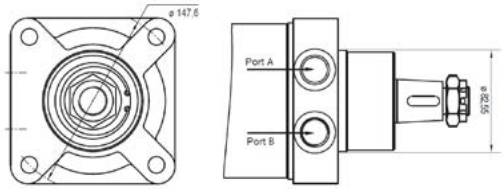

F Magneto Mount, Oval 6-bolt

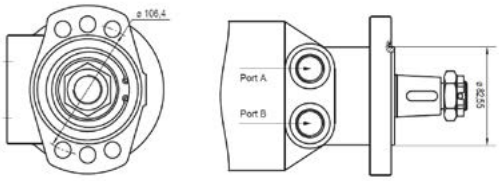

CO 25mm Straight Keyed Shaft

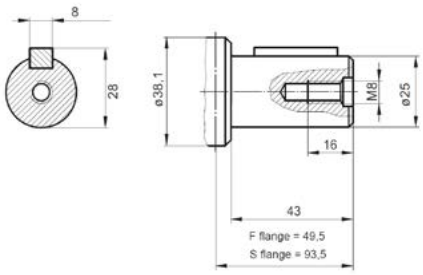

K 1.1/4" Straight Keyed Shaft

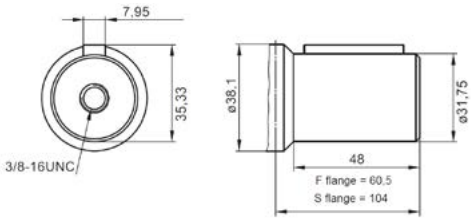

SH 1" 6B Splined Shaft

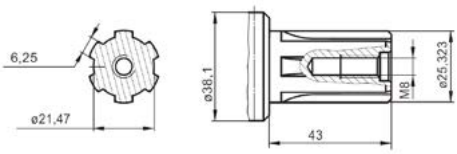

M 32mm Straight Keyed Shaft

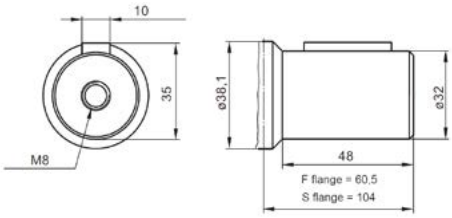

R 1.1/4" 1:8 Tapered Shaft

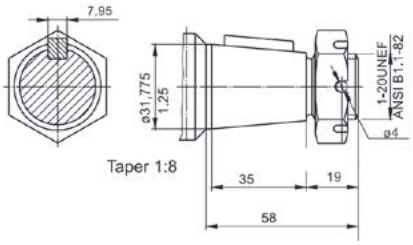

L 1.1/4" 14T Splined Shaft

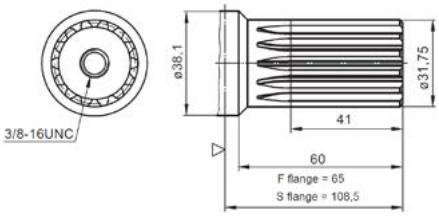

KB 35mm 1:10 Tapered Shaft

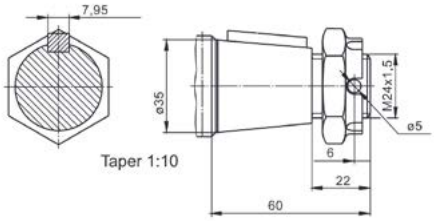

H 1.3/8" Straight Keyed Shaft

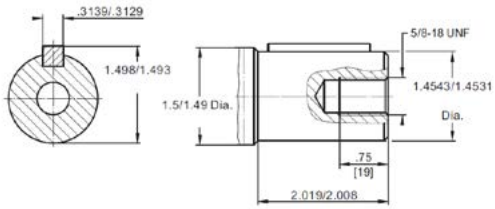

TECH DATA

MS Series Disc Valve Motor

Standard Pricing: Shaft 1.1/4" Straight Keyed, Mount SAE A 4-bolt, Ports 1/2" BSPP, Case 1/4" BSPP

Part #	DISPLACEMENT	ROTOR	SPEED	FLOW	PRESSURE DROP	INLET PRESSURE	TORQUE	WEIGHT
	(cc)	Width L1 (mm)	Max. Cont. (RPM)	Max. Cont. (L/min)	Max. Cont. (Bar)	Max. Cont. (Bar)	Max. Cont. (Nm)	(Kg)
MS 80 COU	80.5	14	810	65	210	230	240	10.4
MS 100 COU	100	17.4	750	75	210	230	305	10.6
MS 125 COU	125.7	21.8	600	75	210	230	375	10.9
MS 160 COU	159.7	27.8	470	75	210	230	490	11.3
MSY 200 COU	200	34.8	375	75	210	230	610	11.7
MSY 250 COU	250	43.5	300	75	200	230	720	12.2
MSY 315 COU	314.9	54.8	240	75	200	230	825	12.9
MSY 400 COU	397	69.4	190	75	160	230	865	13.8
MSY 475 COU	474.6	82.6	160	75	130	230	850	14.9
MS 525 COU	522.7	74.5	145	75	115	230	850	15.1
MS 565 COU	564.9	80.2	130	75	105	230	850	15.5

To ensure best motor life, fill with fluid and run at moderate load for 5-10 minutes

Equivalent to:
BMSY(EU) *Hydnet*
MGS/GMS *Bosch Rexroth*
HR *Brevini*
OMS *Danfoss*
WS *White*

M+S HYDRAULIC
MADE IN EUROPE

Seal Kits

Part #	Pressure Rating without Drain Line
MS-SKD	100 bar ≤100 RPM
MS-SKU	150 bar ≤200 RPM
MSY-SKU	150 bar ≤200 RPM
MSS-SK	n/a
MSU-SK	n/a

Nomenclature

MS/MSY	MOUNTING		DISP.	SHAFTS		SHAFT SEAL		SPEED SENSORS	
MSY used for 200-475cc	Code	Description	80-565cc	Code	Description	Code	Description	Code	Description
	-	SAE A 4-bolt 82.5mm spigot		CO	1.1/4" straight keyed	U	150 bar *	RSSH	Speed sensor universal plug type
	A	SAE A 2-bolt 82.5mm spigot		C	32mm straight keyed		* Refer to specifications for performance data	RSSHL5	Speed sensor universal 5m lead
	Q	Square 4-bolt 82.5mm spigot		CK	35mm straight keyed			ST	Electronic speed sensor
	F	Magneto 4-bolt 82.5mm spigot		SH	1.1/4" 14T splined				
	W	Wheel mount 125mm spigot		SL	1.3/8" 6T splined PTO				
	S	Short motor 100mm spigot		K	35mm 1:10 tapered				
				T	1.1/4" 1:8 tapered				

MS Standard MS Series

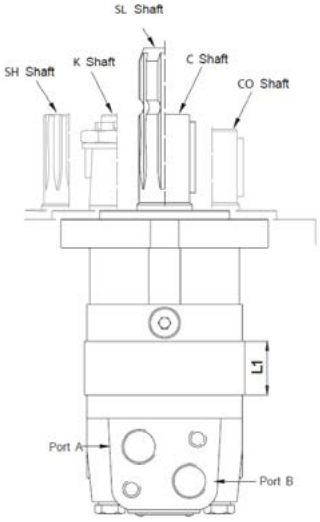

S Short Motor MSS Series

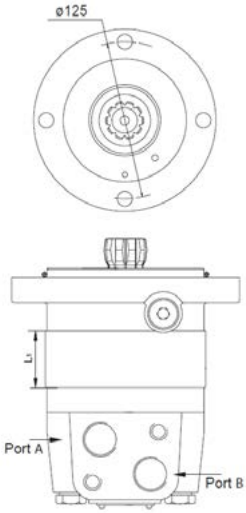

W Wheel Mount MSW Series

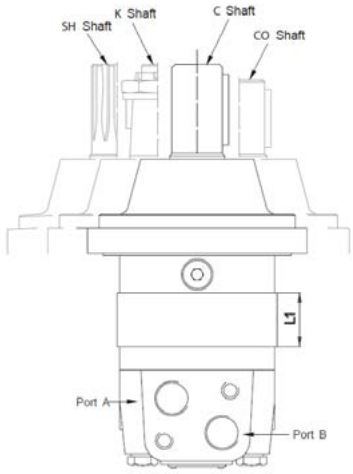

- Standard Mount SAE 4-bolt

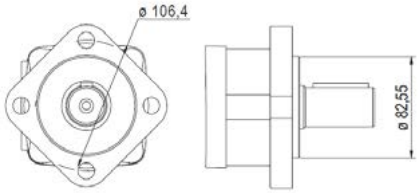

A SAE 2-bolt Mount

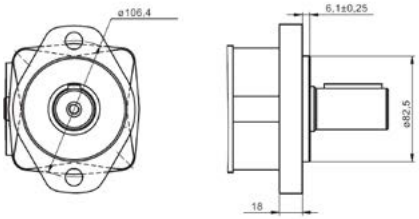

Q Square 4-bolt Mount

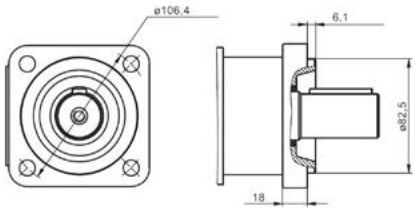

W Wheel Mount 4-bolt

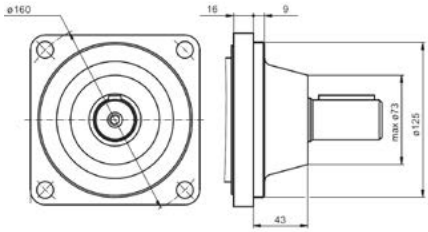

F Magneto 4-bolt Mount

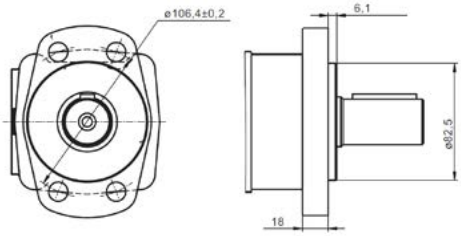

CO 1.1/4" Straight Keyed Shaft

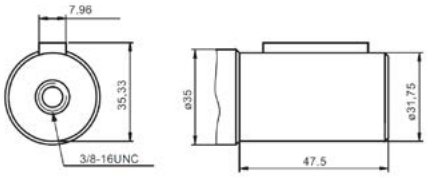

C 32mm Straight Keyed Shaft

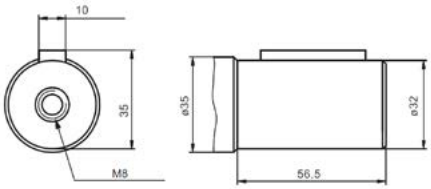

CK 35mm Straight Keyed Shaft

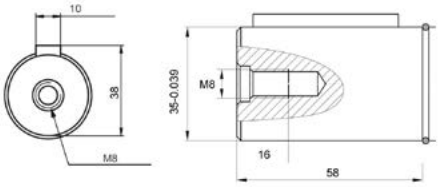

SH 1.1/4" 14T Splined Shaft

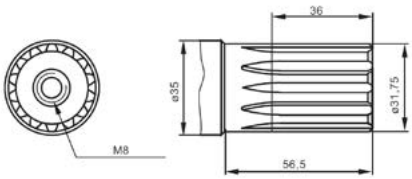

SL 1.3/8" 6T Splined PTO

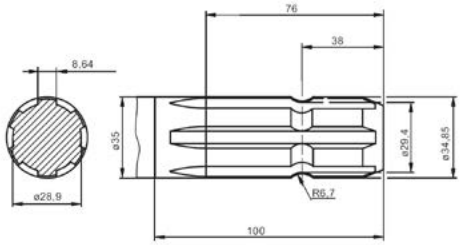

K 35mm 1:10 Tapered Shaft

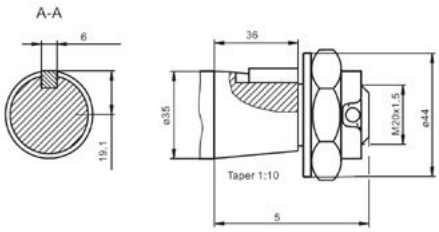

T 1.1/4" 1:8 Tapered Shaft

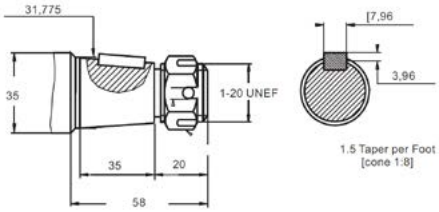

TECH DATA

MLHS Series Disc Valve Motor

Standard Pricing: Shaft 1.1/4" Straight Keyed, Mount SAE A 4-bolt, Ports 7/8" UNF, Case 7/16" UNF

Part #	DISPLACEMENT	ROTOR	SPEED	FLOW	PRESSURE DROP	INLET PRESSURE	TORQUE	WEIGHT
	(cc)	Width L1 (mm)	Max. Cont. (RPM)	Max. Cont. (L/min)	Max. Cont. (Bar)	Max. Cont. (Bar)	Max. Cont. (Nm)	(Kg)
MLHS 80 C4U	80.5	14	810	65	210	230	240	10.4
MLHS 100 C4U	100	17.4	750	75	210	230	305	10.6
MLHS 125 C4U	125.7	21.8	600	75	210	230	375	10.9
MLHS 160 C4U	159.7	27.8	470	75	210	230	490	11.3
MLHSY 200 C4U	200	34.8	375	75	210	230	610	11.7
MLHSY 250 C4U	250	43.5	300	75	200	230	720	12.2
MLHSY 315 C4U	314.9	54.8	240	75	200	230	825	12.9
MLHSY 400 C4U	397	69.4	190	75	160	230	865	13.8
MLHSY 475 C4U	474.6	82.6	160	75	130	230	850	14.9
MLHS 525 C4U	522.7	74.5	145	75	115	230	850	15.1
MLHS 565 C4U	564.9	80.2	130	75	105	230	850	15.5

To ensure best motor life, fill with fluid and run at moderate load for 5-10 minutes

Equivalent to:
BMSY(US) *Hydnet*
HRS *Brevini*
OMS(US) *Danfoss*
2000 *Eaton Char Lynn*
TG *Parker*
ME *Ross/TRW*
RE(500) *White*

M+S HYDRAULIC
MADE IN EUROPE

Seal Kits

Part #	Pressure Rating without Drain Line
MLHS-SKU	150 bar ≤200 RPM
MLHSY-SKU	150 bar ≤200 RPM

Nomenclature

MLHS/Y	MOUNTING		DISP.	SHAFTS		PORTS		SHAFT SEALS		SPEED SENSORS	
	Code	Description	80-565cc	Code	Description	Code	Description	Code	Description	Code	Description
MLHSY used for 200-475cc	-	SAE A 4-bolt 82.5mm spigot		C	1.1/4" straight keyed	4	Side ports 7/8" UNF	U	150 bar *	RS SH	Speed sensor universal plug type
	A	SAE A 2-bolt 82.5mm spigot		D	1" straight keyed	2	Side ports 1/2" BSPP		* Refer to specifications for performance data	RS SHL5	Speed sensor universal 5m lead
	F	Magneto 4-bolt 82.5mm spigot		CA	25mm straight keyed						
	B	SAE B 2-bolt 101.6mm spigot		M	32mm straight keyed						
	E	Wheel mount 107.95mm spigot		SR	7/8" 13T splined						
				S	1" 6B splined						
				G	1.1/4" 14T splined						
				T	1.1/4" 1:8 tapered						
				P	1.3/8" 6T PTO						

MLHS Standard MLHS Series

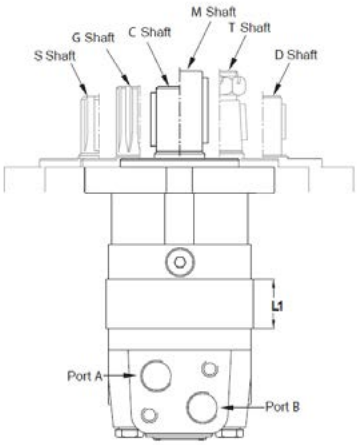

MLHSE Wheel Mount MLHSE Series

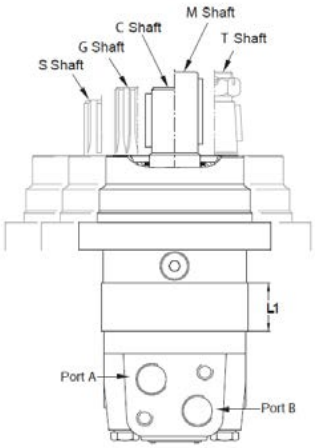

A A Mount SAE A 2-bolt

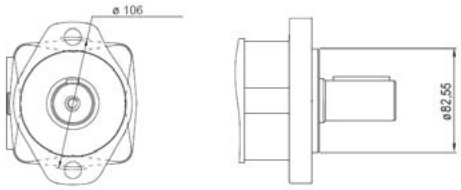

- Standard Mount SAE A 4-bolt

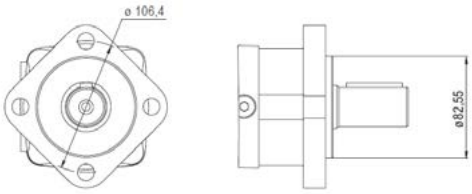

E Wheel Mount 4-bolt

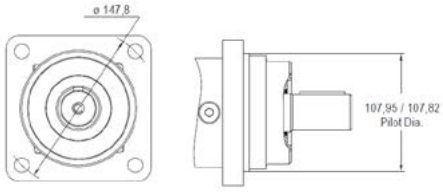

F Magneto 4-bolt Mount

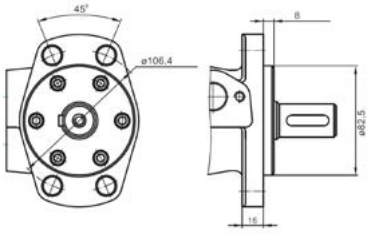

B SAE B 2-bolt Mount

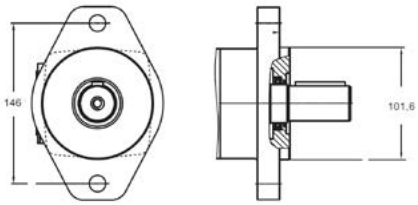

C 1.1/4" Straight Keyed Shaft

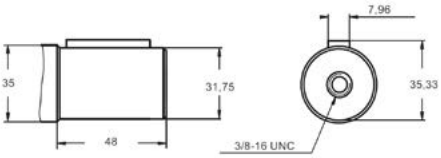

D 1" Straight Keyed Shaft

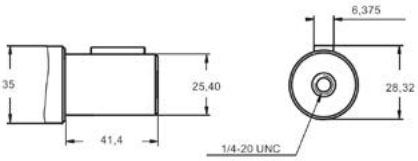

M 32mm Straight Keyed Shaft

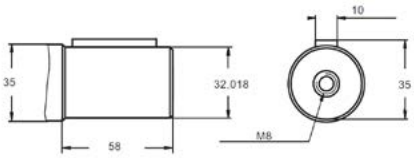

S 1" 6B Splined Shaft

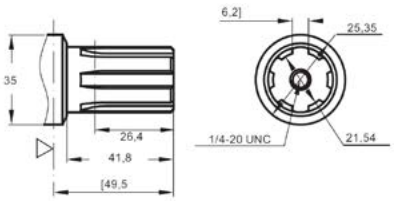

G 1.1/4" 14T Splined Shaft

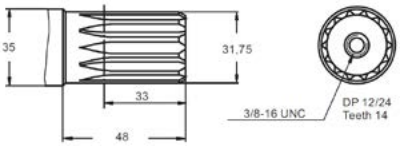

T 1.1/4" 1:8 Tapered Shaft

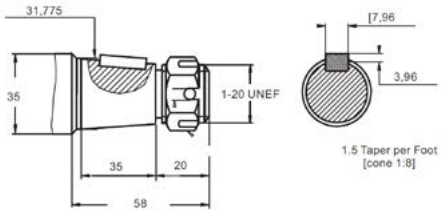

P 1.3/8" 6T PTO Shaft

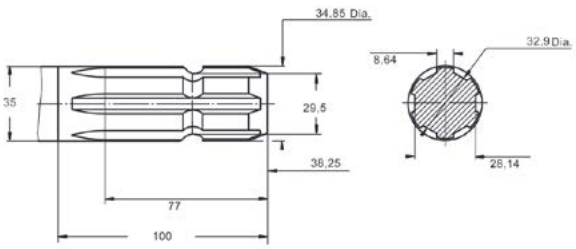

TECH DATA

MYZ Series Disc Valve Motor

Standard Pricing: Shaft 1.1/4" Straight Keyed, Mount SAE B 4-bolt, Ports 1.1/16" UNF, Case 7/16" UNF

Part #	DISPLACEMENT	ROTOR	SPEED	FLOW	PRESSURE DROP	INLET PRESSURE	TORQUE	WEIGHT
	(cc)	Width L1 (mm)	Max. Cont. (RPM)	Max. Cont. (L/min)	Max. Cont. (Bar)	Max. Cont. (Bar)	Max. Cont. (Nm)	(Kg)
MYZ4B 160 DR4U	157.9	21.8	570	90	205	210	425	15
MYZ4B 200 DR4U	201.3	27.8	445	90	205	210	550	16
MYZ4B 250 DR4U	252.2	34.8	355	90	205	210	700	17
MYZ4B 315 DR4U	314.9	43.5	285	90	205	210	850	18
MYZ4B 400 DR4U	396.8	54.8	225	90	185	210	970	19
MYZ4B 470 DR4U	470.5	65	190	90	140	210	950	20
MYZ4B 550 DR4U	550	76	160	90	125	210	910	22

To ensure best motor life, fill with fluid and run at moderate load for 5-10 minutes

Equivalent to:
4000 *Eaton Char Lynn*
MJ *Ross/TRW*

M+S HYDRAULIC
MADE IN EUROPE

Seal Kits

Part #	Pressure Rating without Drain Line
MYZ-SKU	100 bar ≤300 RPM

Nomenclature

MYZ	MOUNTING		DISP.	SHAFTS		PORTS		SHAFT SEALS	
	Code	Description	160-550cc	Code	Description	Code	Description	Code	Description
	4A	SAE A 4-bolt 82.5mm spigot		CS	32mm straight keyed	4	1.1/16" UNF	U	100 bar *
	4B	SAE B 4-bolt 101.6mm spigot		CV	40mm straight keyed				
	4C	SAE C 4-bolt 127mm spigot		DR	1.1/4" straight keyed				
	WQ	Wheel mount 139.7mm spigot		DU	1.1/2" straight keyed				
				SK	1.1/4" 14T splined				
				TP	1.1/4" 1:8 tapered				
				TT	1.1/2" 1:8 tapered				

** Refer to specifications for performance data*

MYZ Standard MYZ4B Series

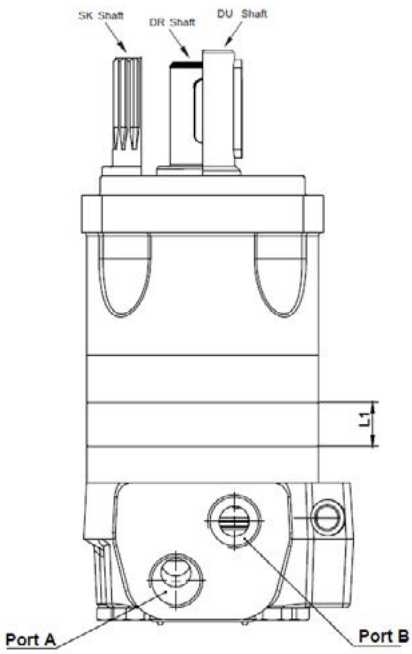

4A Mount SAE A 4-bolt

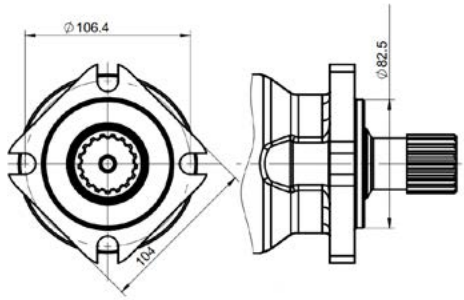

4B Mount SAE B 4-bolt

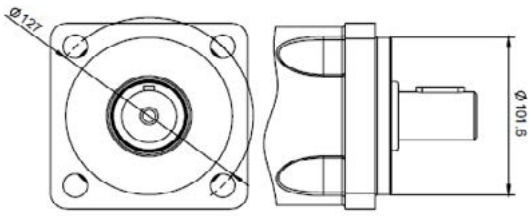

WQ Wheel Mount

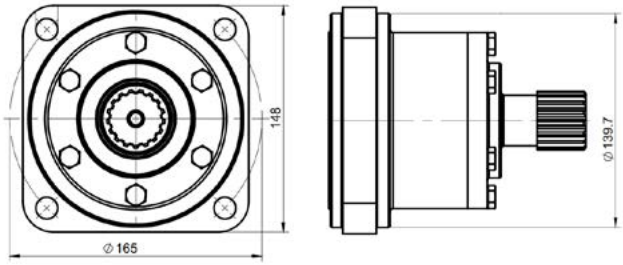

4C Mount SAE C 4-bolt

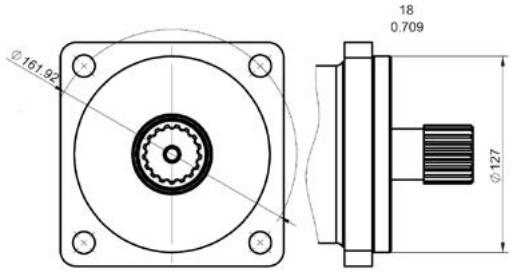

SK 1.1/4" 14T Splined Shaft

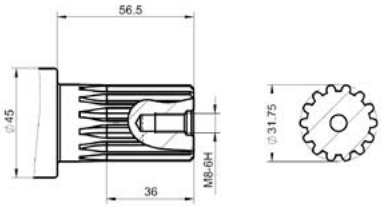

DU 1.1/2" Straight Keyed Shaft

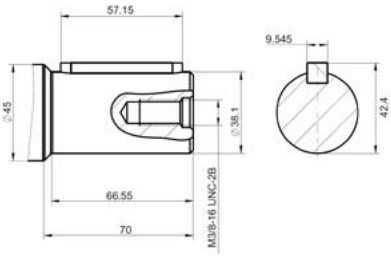

DR 1.1/4" Straight Keyed Shaft

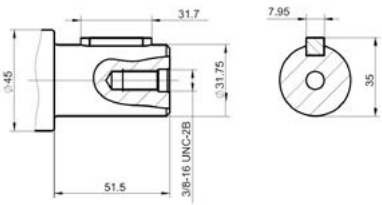

CS 32mm Straight Keyed Shaft

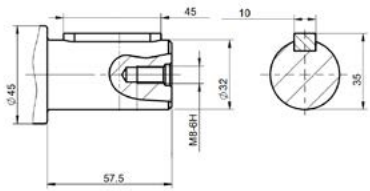

CV 40mm Straight Keyed Shaft

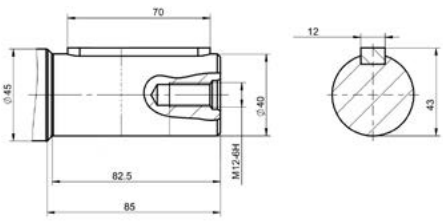

TT 1.1/2" 1:8 Tapered

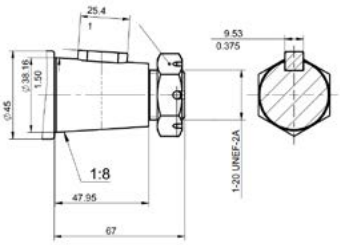

TECH DATA

MT Series Disc Valve Motor

Standard Pricing: Shaft 40mm Straight Keyed, Mount 4-bolt, Ports 3/4" BSPP, Case 1/4" BSPP

Part #	DISPLACEMENT	ROTOR	SPEED	FLOW	PRESSURE DROP	INLET PRESSURE	TORQUE	WEIGHT
	(cc)	Width L1 (mm)	Max. Cont. (RPM)	Max. Cont. (L/min)	Max. Cont. (Bar)	Max. Cont. (Bar)	Max. Cont. (Nm)	(Kg)
MT 160 CU	161.1	16.5	622	100	200	210	470	21
MT 200 CU	201.4	21.5	620	125	200	210	590	21.5
MT 250 CU	251.8	27.8	496	125	200	210	730	22
MT 315 CU	326.3	37	382	125	200	210	950	23
MT 400 CU	410.9	47.5	304	125	180	210	1080	24
MT 500 CU	523.6	61.5	238	125	160	210	1220	25
MT 630 CU	631.2	57.5	197	125	140	210	1300	25.5
MT 725 CU	724.3	66.5	172	125	120	210	1270	26

To ensure best motor life, fill with fluid and run at moderate load for 5-10 minutes

Equivalent to:
BMT *Hydnet*
MGT/GMT *Bosch Rexroth*
HT *Brevini*
OMT *Danfoss*

M+S HYDRAULIC
MADE IN EUROPE

Seal Kits

Part #	Pressure Rating without Drain Line
MT-SKD	75 bar ≤150 RPM
MT-SKU	100 bar ≤300 RPM
MTS-SK	n/a

Nomenclature

MT	MOUNTING		DISPLACEMENT	SHAFTS		SHAFT SEALS & SPEED SENSORS	
	Code	Description	160-725cc	Code	Description	Code	Description
	-	Square 4-hole 125mm spigot		C	40mm straight keyed	U	100 bar shaft seal *
	W	Wheel mount 160mm spigot		CO	1.1/2" straight keyed	HD	Reinforced seals
	S	Short motor 125mm spigot		SH	1.1/2" 17T splined	RS SH	Speed sensor universal plug type
				SH-06	1.1/4" 14T splined	RSSHL5	Speed sensor universal 5m lead
				SL	1.3/8" 6T splined PTO	T	Tacho connection
				K	45mm 1:10 tapered	ST	Electronic speed sensor

** Refer to specifications for performance data*

MT Standard MT Series

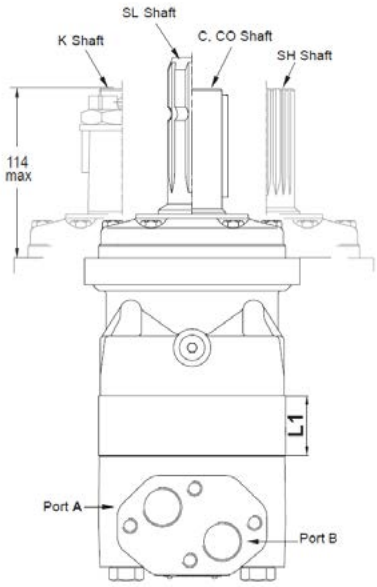

S Short Motor MTS Series

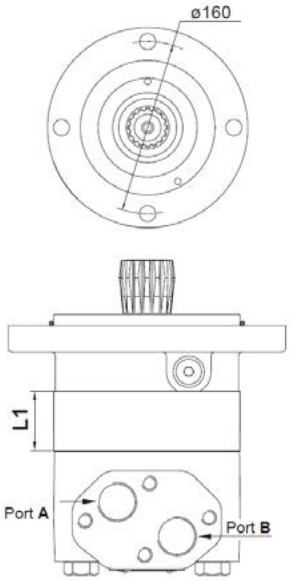

W Wheel Mount MTW Series

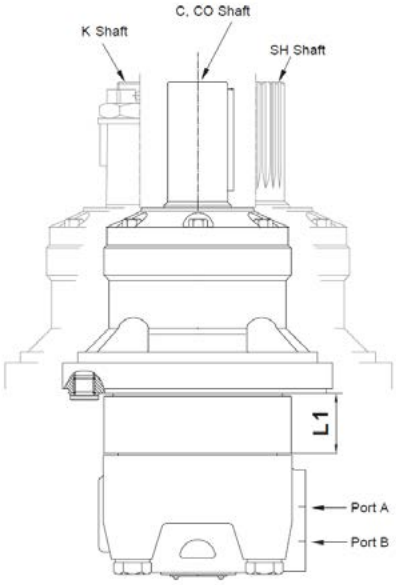

- Standard Mount SAE 4-bolt

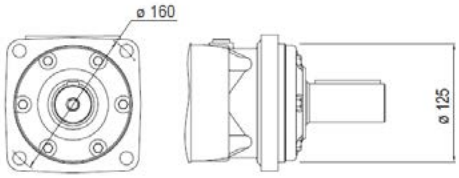

W Wheel Mount 4-bolt

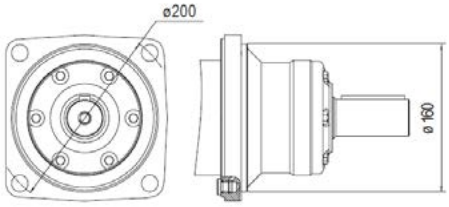

C 40mm Straight Keyed Shaft

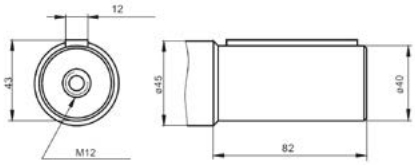

CO 1.1/2" Straight Keyed Shaft

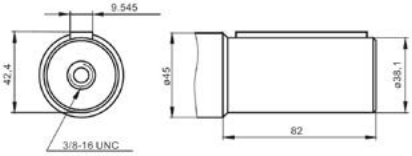

SH 1.1/2" 17T Splined Shaft

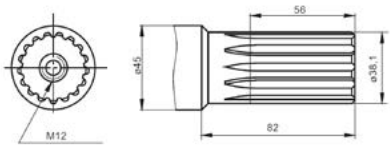

SL 1.3/8" 6T Splined PTO Shaft

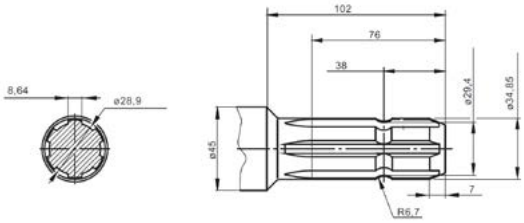

K 45mm 1:10 Tapered Shaft

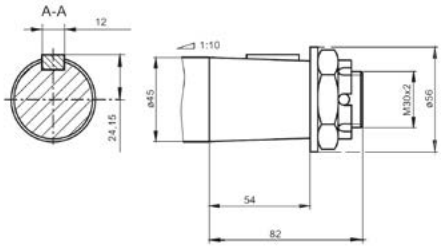

TECH DATA

MLHT Series Disc Valve Motor

Standard Pricing: Shaft 1.1/2" Straight Keyed, Mount SAE C 4-bolt, Ports 1.1/16" UNF, Case 9/16" UNF

Part #	DISPLACEMENT	ROTOR	SPEED	FLOW	PRESSURE DROP	INLET PRESSURE	TORQUE	WEIGHT
	(cc)	Width L1 (mm)	Max. Cont. (RPM)	Max. Cont. (L/min)	Max. Cont. (Bar)	Max. Cont. (Bar)	Max. Cont. (Nm)	(Kg)
MLHT 160 C4U	161.1	16.5	622	100	200	210	470	21
MLHT 200 C4U	201.4	21.5	620	125	200	210	590	21.5
MLHT 250 C4U	251.8	27.8	496	125	200	210	730	22
MLHT 315 C4U	326.3	37	382	125	200	210	950	23
MLHT 400 C4U	410.9	47.5	304	125	180	210	1080	24
MLHT 500 C4U	523.6	61.5	238	125	160	210	1220	25
MLHT 630 C4U	631.2	57.5	197	125	140	210	1300	25.5
MLHT 725 C4U	724.3	66.5	172	125	120	210	1270	26

To ensure best motor life, fill with fluid and run at moderate load for 5-10 minutes

Equivalent to:
OMT(US) *Danfoss*

M+S HYDRAULIC
MADE IN EUROPE

Seal Kits

Part #	Pressure Rating without Drain Line
MLHT-SKU	75 bar ≤150 RPM

Nomenclature

MLHT	MOUNTING		DISPLACEMENT	SHAFTS		PORTS		SHAFT SEALS	
	Code	Description	160-725cc	Code	Description	Code	Description	Code	Description
	-	SAE C 4-bolt 127mm Spigot		C	1.1/2" straight keyed	4	1.1/16" UNF	U	100 bar shaft seal *
	W	Wheel Mount 160mm Spigot		M	40mm straight keyed			HD	Reinforced seals
				G	1.1/2" 17T spline				
				T	44.45mm 1:8 tapered				
				P	34.85mm 6T spline PTO				

** Refer to specifications for performance data*

MLHT Standard MLHT Series

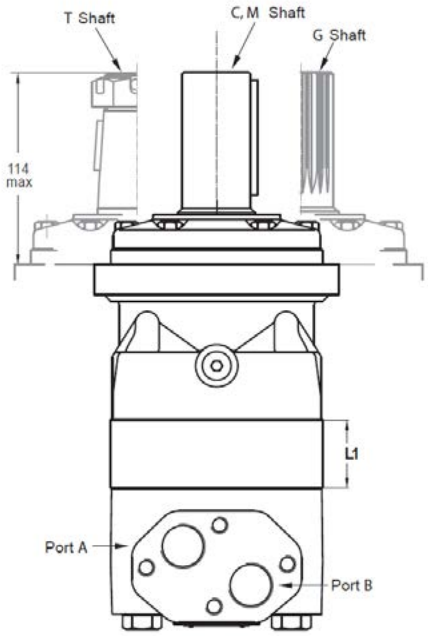

MLHTW Wheel Mount MLHTW Series

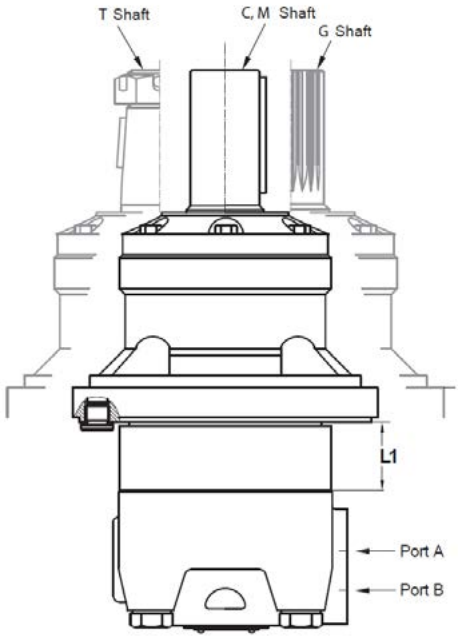

- Standard Mount SAE C 4-bolt

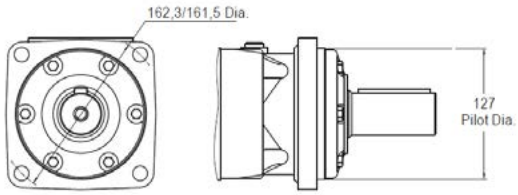

W Wheel Mount 4-bolt

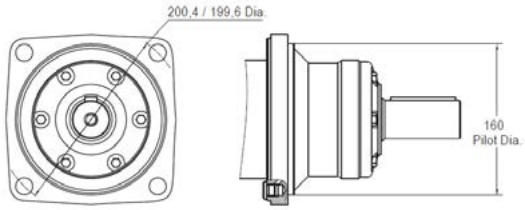

C 1.1/2" Straight Keyed Shaft

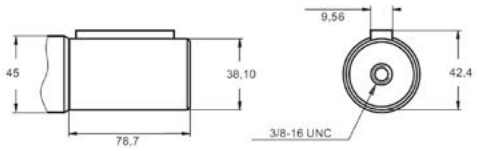

P 34.85mm 6T Splined PTO Shaft

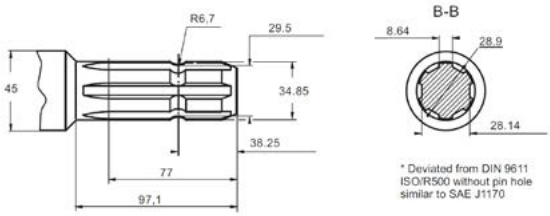

M 40mm Straight Keyed Shaft

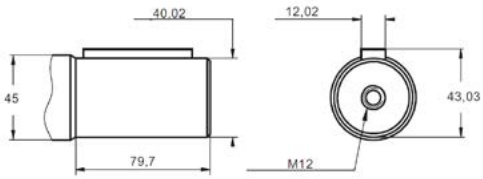

T 44.45mm 1:8 Tapered Shaft

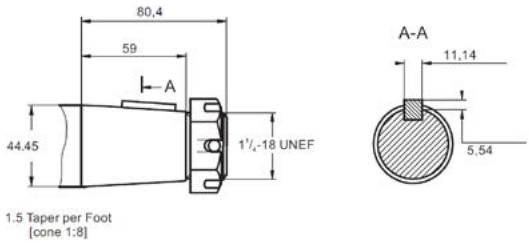

G 1.1/2" 17T Splined Shaft

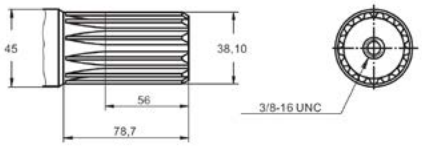

TECH DATA

MTM Series Disc Valve Motor

Standard Pricing: Shaft 40mm Keyed, Mount Standard 4-bolt, Ports 3/4" BSPP, Case 1/4" BSPP

Part #	DISPLACEMENT	ROTOR	SPEED	FLOW	PRESSURE DROP	INLET PRESSURE	TORQUE	WEIGHT
	(cc)	Width L1 (mm)	Max. Cont. (RPM)	Max. Cont. (L/min)	Max. Cont. (Bar)	Max. Cont. (Bar)	Max. Cont. (Nm)	(Kg)
MTM 200 CU HD	201.4	25	625	125	250	270	740	27.9
MTM 250 CU HD	251.8	31.3	500	125	250	270	900	28.3
MTM 315 CU HD	326.3	40.5	380	125	250	270	1160	29.1
MTM 400 CU HD	410.9	51	305	125	250	270	1470	30
MTM 470 CU HD	475	59	260	125	250	270	1710	30.7
MTM 500 CU HD	523.6	65	240	125	230	270	1720	31.2
MTM 630 CU HD	631.2	61	190	125	200	270	1830	30.7
MTM 725 CU HD	724	70	170	125	160	270	1600	32

To ensure best motor life, fill with fluid and run at moderate load for 5-10 minutes

Equivalent to:
TMT *Danfoss*
6000 *Eaton Char Lynn*

M+S HYDRAULIC
MADE IN EUROPE

Seal Kits

Part #	Pressure Rating without Drain Line
MTM-SKD	75 bar ≤150 RPM
MTM-SKU	100 bar ≤300 RPM

Nomenclature

MTM	MOUNTING		DISPLACEMENT	SHAFTS		SHAFT SEALS	
	Code	Description	200-725cc	Code	Description	Code	Description
	-	Square 4-bolt 160mm spigot		C	40mm straight keyed	HD	75 bar * (reinforced seals)
	C	Square 4-bolt 125mm spigot		SH	1.1/2" 17T splined	U	100 bar
	W	Wheel mount 160mm spigot		K	50mm 1:10 tapered		
				CO	1.1/2" keyed		

** Refer to specifications for performance data*

MTM Standard MTM Series

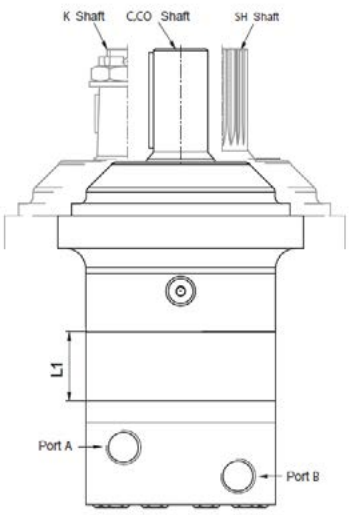

MTMC MTMC Series

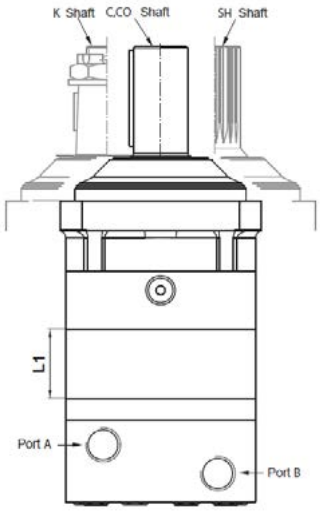

MTMW MTMW Series

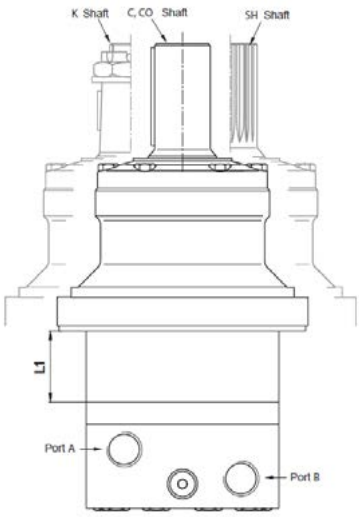

- Standard Mount 4-bolt

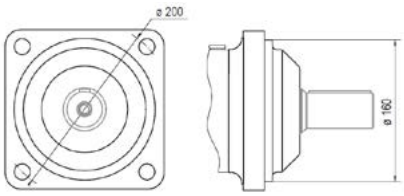

C Mount 4-bolt

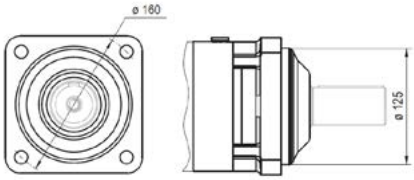

W Wheel Mount 4-bolt

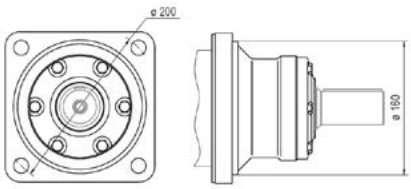

C 40mm Straight Keyed Shaft

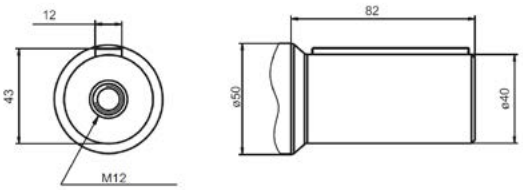

SH 1.1/2" 17T Splined Shaft

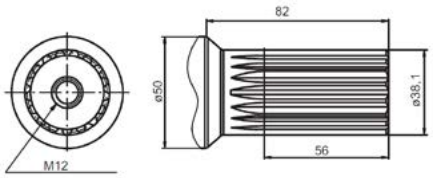

CO 1.1/2" Straight Keyed Shaft

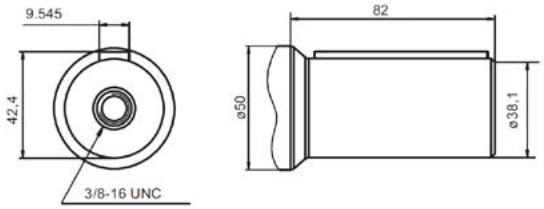

K 50mm 1:10 Tapered Shaft

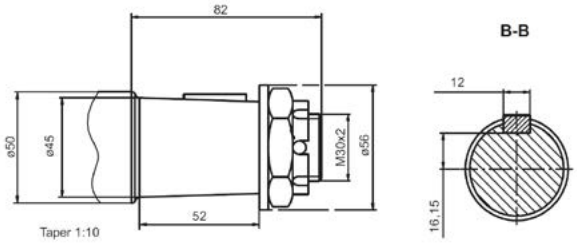

TECH DATA

MV Series Disc Valve Motor

Standard Pricing: Shaft 50mm Straight Keyed, Mount Standard 4-bolt, Ports 1" BSPP, Case 1/4" BSPP

Part #	DISPLACEMENT	ROTOR	SPEED	FLOW	PRESSURE DROP	INLET PRESSURE	TORQUE	WEIGHT
	(cc)	Width L1 (mm)	Max. Cont. (RPM)	Max. Cont. (L/min)	Max. Cont. (Bar)	Max. Cont. (Bar)	Max. Cont. (Nm)	(Kg)
MV 315 CU HD	314.5	22	510	160	200	210	920	32.8
MV 400 CU HD	400.9	29	500	200	200	210	1180	33.6
MV 500 CU HD	499.6	37	400	200	200	210	1460	34.5
MV 630 CU HD	629.1	47.5	320	200	180	210	1660	35.9
MV 800 CU HD	801.8	61.5	250	200	160	210	1880	37.5

To ensure best motor life, fill with fluid and run at moderate load for 5-10 minutes

Equivalent to:
BMV *Hydnet*
MGV/GMV *Bosch Rexroth*
OMV *Danfoss*

M+S HYDRAULIC
MADE IN EUROPE

Seal Kits

Part #	Pressure Rating without Drain Line
MV-SK	60 bar ≤100 RPM
MV-SKU	60 bar ≤350 RPM
MV-SKU-HD	60 bar ≤350 RPM
MVC-SK	60 bar ≤100 RPM
MVC-SKU	60 bar ≤350 RPM
MVC-SKU-HD	60 bar ≤350 RPM
MVS-SK	n/a

Nomenclature

MV	MOUNTING		DISPLACEMENT	SHAFTS		SHAFT SEALS	
	Code	Description	315-800cc	Code	Description	Code	Description
	-	Square 4-bolt 160mm spigot		C	50mm straight keyed	U	60 bar *
	C	SAE C 4-bolt 127mm spigot		CO	2.1/4" straight keyed	HD	Reinforced seals
	W	Wheel Mount 180mm spigot		SH	2.1/8" 16T splined		** Refer to specifications for performance data*
	S	Short Motor 140mm spigot		K	60mm 1:10 tapered		

MV Standard Mount MV Series

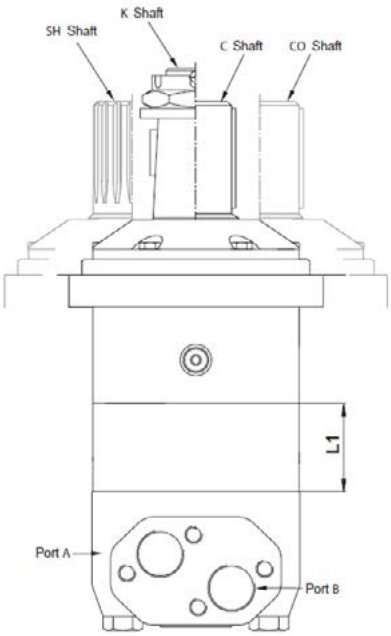

MVC MVC Series

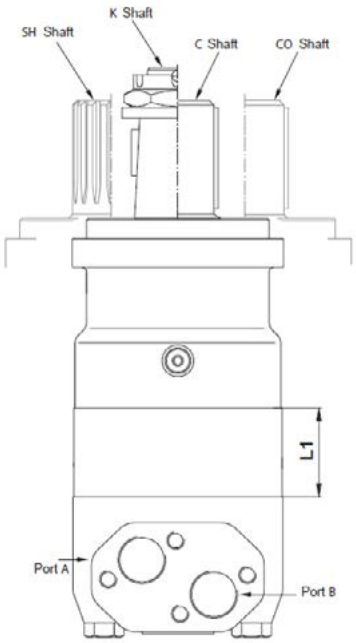

MVW MVW Series

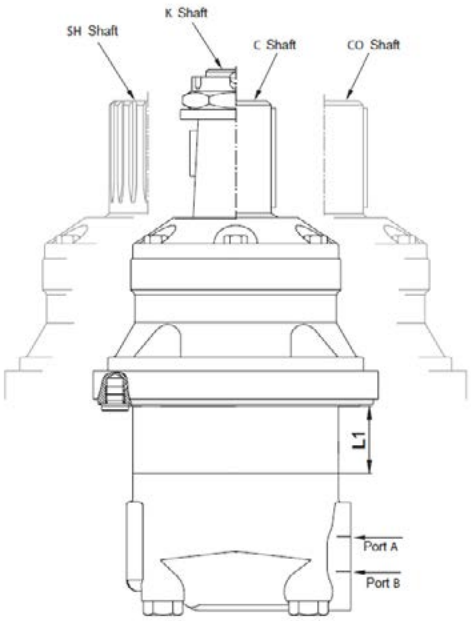

- Standard Mount 4-bolt

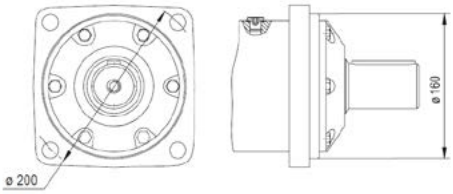

C Mount 4-bolt

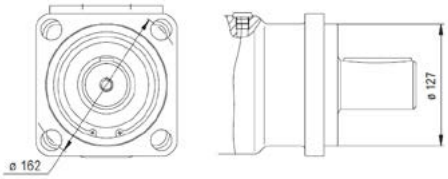

W Wheel Mount 4-bolt

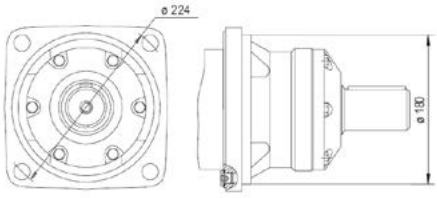

S Short Motor Mount

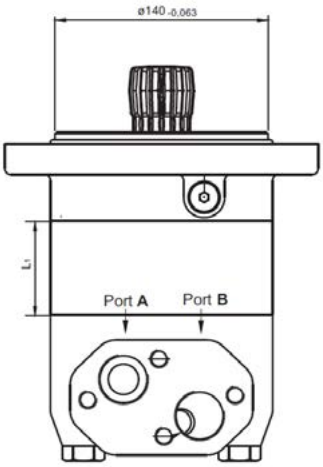

C 50mm Straight Keyed Shaft

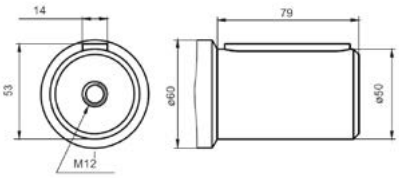

CO 2.1/4" Straight Keyed Short

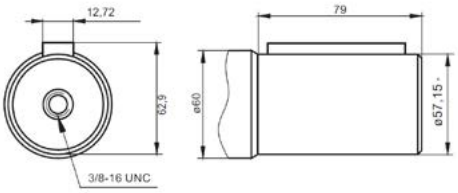

SH 2.1/8" 16T Splined Shaft

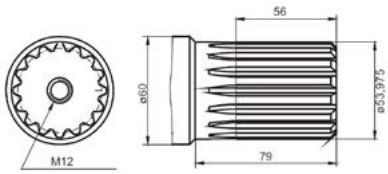

K 60mm 1:10 Tapered Shaft

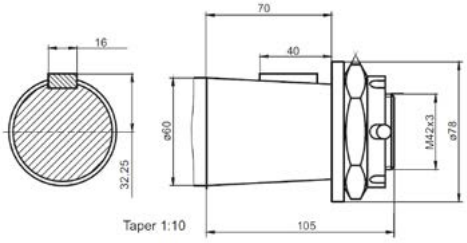

TECH DATA

MLHV Series Disc Valve Motor

Standard Pricing: Shaft 2.1/4" Keyed, Mount Standard 4-bolt, Ports 1.5/16" UNF, Case 9/16" UNF

Part #	DISPLACEMENT	ROTOR	SPEED	FLOW	PRESSURE DROP	INLET PRESSURE	TORQUE	WEIGHT
	(cc)	Width L1 (mm)	Max. Cont. (RPM)	Max. Cont. (L/min)	Max. Cont. (Bar)	Max. Cont. (Bar)	Max. Cont. (Nm)	(Kg)
MLHV 315 C4U HD	314.5	22	510	160	200	210	920	31.7
MLHV 400 C4U HD	400.9	29	500	200	200	210	1180	32.5
MLHV 500 C4U HD	499.6	37	400	200	200	210	1460	33.4
MLHV 630 C4U HD	629.1	47.5	320	200	180	210	1660	34.6
MLHV 800 C4U HD	801.8	61.5	250	200	160	210	1880	36.2

To ensure best motor life, fill with fluid and run at moderate load for 5-10 minutes

Equivalent to:
OMT(US) *Danfoss*

M+S HYDRAULIC
MADE IN EUROPE

Seal Kits

Part #	Pressure Rating without Drain Line
MLHV-SKU-SD	60 bar ≤350 RPM
MLHVC-SKU-HD	60 bar ≤350 RPM

Nomenclature

MLHV	MOUNTING		DISP.	SHAFTS		PORTS		SHAFT SEALS	
	Code	Description	315-800cc	Code	Description	Code	Description	Code	Description
	-	Square 4-bolt		C	2.1/4" straight keyed	4	1.5/16" UNF	HD	Reinforced seals
	C	SAE C 4-bolt		MA	40mm straight keyed			U	Standard seals
				G	2.1/8" 16T spline				
				T	2.1/4" 1:8 tapered				
				CA	1.1/2" straight keyed				

MLHV Standard Mount Square 4-bolt

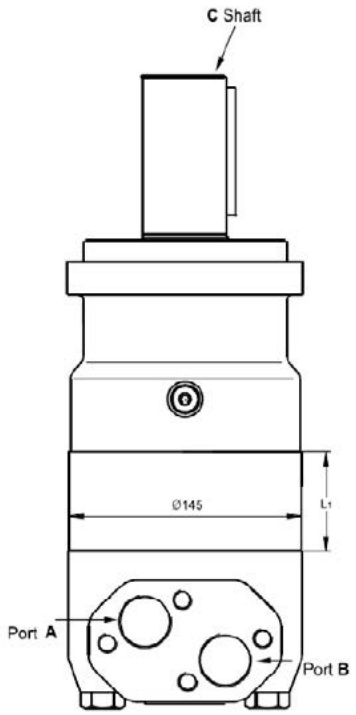

MLHVC Standard SAE C 4-bolt Mount

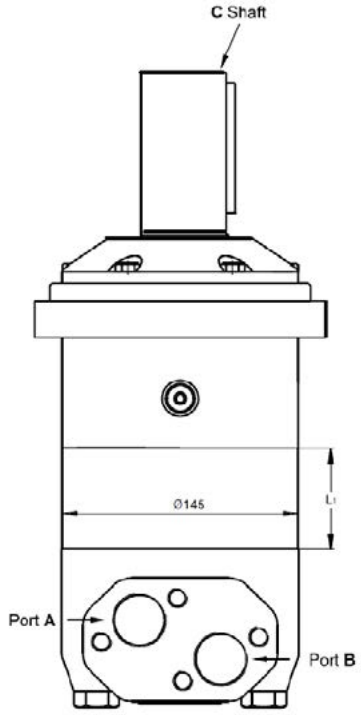

- Standard Mount 4-bolt

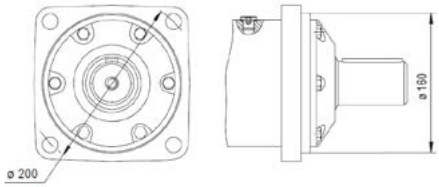

C SAE C 4-bolt Mount

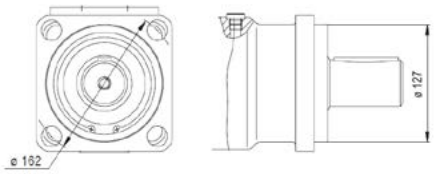

C 2.1/4" Straight Keyed Shaft

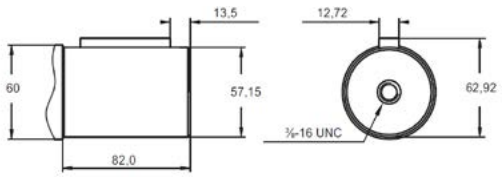

CA 1.1/2" Straight Keyed Shaft

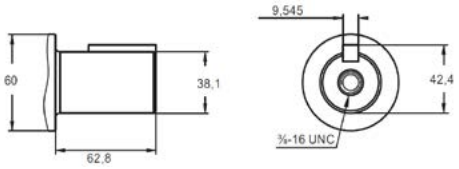

MA 40mm Straight Keyed Shaft

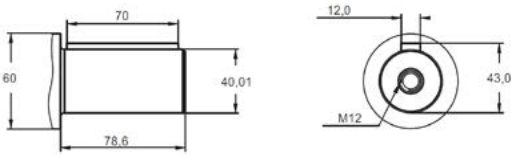

T 2.1/4" 1:8 Tapered Shaft

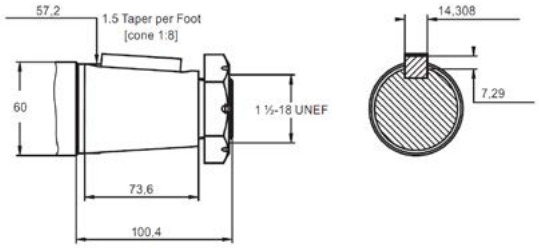

G 2.1/8" 16T Splined Shaft

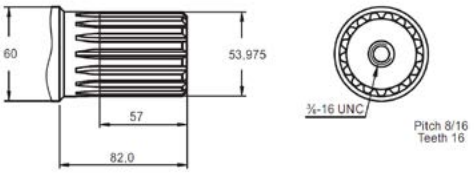

TECH DATA

LB Series Static Torque Disc Brakes

Part #	Brake Input		Brake Output Shaft Mount	Static Torque	Opening Pressure	Min Oil Release	Max Pressure Drain	Weight
	Motor Series	Shaft Mount		(Nm)	Min/Max (Bar)	(cm^3)	(Bar)	(Kg)
LB/288CO-63CO	MP, MR	1" keyed SAE A 2-bolt	1" keyed SAE A 2/4-bolt	610-640	23/300	7-8	0.5	10
LB/288SH-63CO	MP, MR	1" 6B splined SAE A 2-bolt	1" keyed SAE A 2/4-bolt	610-640	23/300	7-8	0.5	10
LB/288CB-63CB	MP, MR, MH, MS	32mm straight SAE A 2/4-bolt	32mm straight SAE A 2/4-bolt	610-640	23/300	7-8	0.5	10
LBS/289-63CB	MSS Short		32mm straight SAE A 2/4-bolt	610-640	23/300	7-8	5	9
LBS/290-63KB	MSS Short		35mm 1:10 tapered wheel	610-640	23/300	7-8	5	9
LBS/290-63SH	MSS Short		1/4" 14T shaft	610-640	23/300	7-8	5	9
LBS/314-130C	MTS Short		40mm straight keyed 4-bolt mount	1260-1360	29/300	8-9	5	24
LBS/315-130K	MTS Short		45mm 1:10 tapered wheel	1260-1360	29/300	8-9	5	25
LBS/316-130C	MVS Short		50mm straight keyed 4-bolt	1270-1370	29/300	8-9	5	26
LBS/316-130K	MVS Short		60mm 1:10 tapered wheel	1270-1370	29/300	8-9	5	26

Seal Kits

Part #
LB288-SK
LBS289/290-SK
LBS314/315-SK
LBS316-SK

M+S HYDRAULIC
MADE IN EUROPE

LB Series

LBS Series

LB/288 - Input/Side/Output

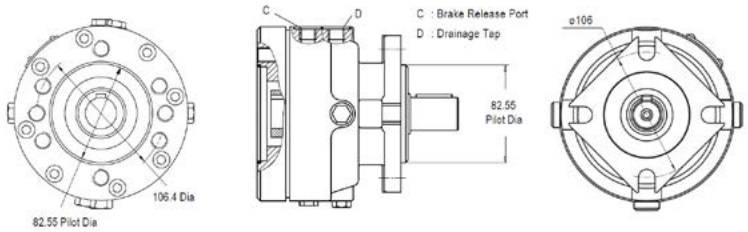

LBS289CS -Side/Output

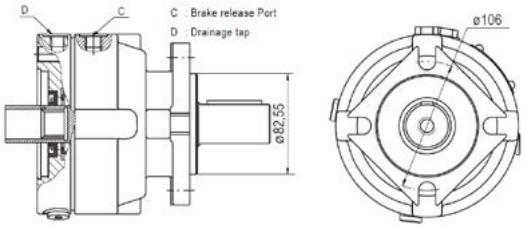

LB/288 - CB Input Shaft

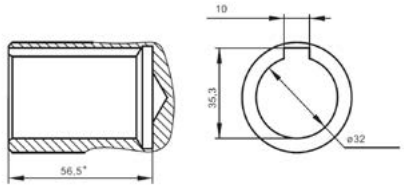

LB/288 - CO Input Shaft

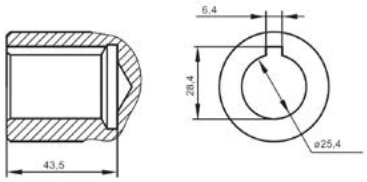

LB/288 - SH Input Shaft

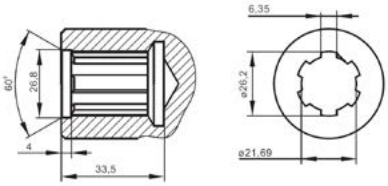

LB/288 - CB Output Shaft

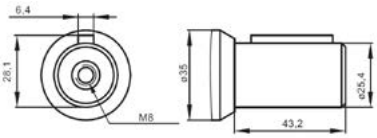

LB/288 - CO Output Shaft

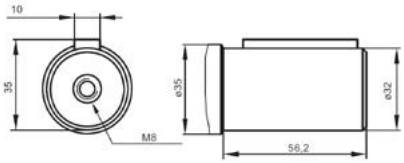

LBS/289 - CB Output Shaft

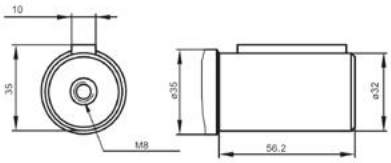

LBS/290KB -Side/Output

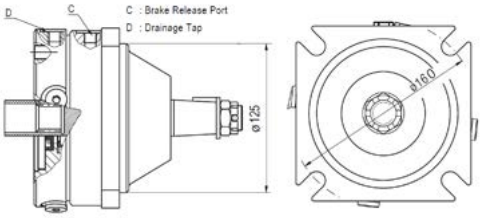

LBS/290 - SH - Side/Output

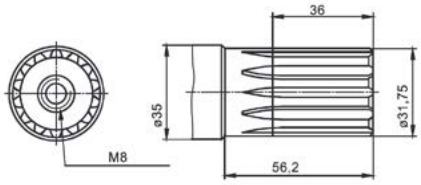

LBS/290 - KB Output Shaft

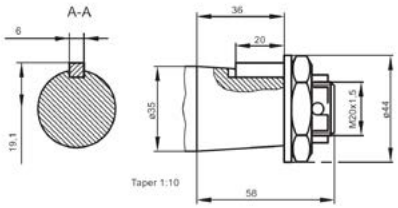

LBS/314C -Side/Output

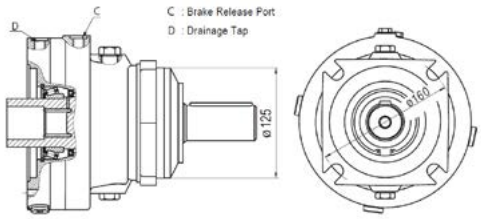

LBS/315K -Side/Output

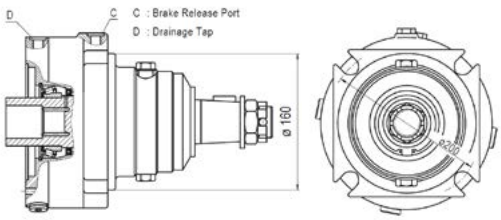

Example: MSS Motor + LBS289

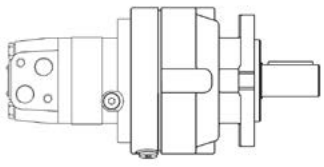

LBS/316K -Side/Output

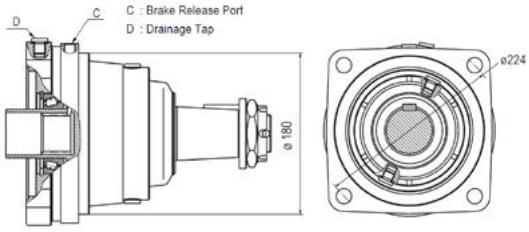

LBS/316 - C Output Shaft

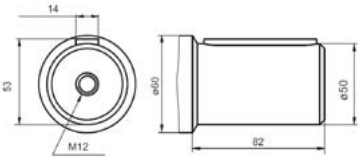

LBS/316 - K Output Shaft

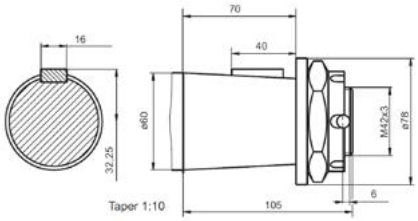

TECH DATA

Overcentre Valve with Brake Release Port

Part #	Motor Type	Cartridge	A/B Ports	C Ports	Max. Cont. Flow	Pressure Range	Pilot Ratio
KPBR 250/1/D	MP, MR, MH, MPYN, MRYN	Dual	1/2" BSPP	1/4" BSPP	60 L/min	60-280 bar	4.25:1
KPBHR 250/1/D	HP, HR	Dual	7/8"-14 UNF	7/16"-20 UNF	60 L/min	70-250 bar	4.25:1
KPBW 250/1/D	RW, HW	Dual	1/2" BSPP	1/4" BSPP	60 L/min	60-280 bar	4.25:1
KPBS 250/1/AE	MS	Single	1/2" BSPP	1/4" BSPP	60 L/min	60-280 bar	4.25:1
KPBS 250/1/D	MS	Dual	1/2" BSPP	1/4" BSPP	60 L/min	60-280 bar	4.25:1
KPBS 250/2/D	MS	Dual	1/2" BSPP	1/4" BSPP	60 L/min	60-280 bar	8:1
KPBT 250/1/AE	MT	Single	3/4" BSPP	1/4" BSPP	100 L/min	70-250 bar	4.25:1
KPBT 250/1/D	MT	Dual	3/4" BSPP	1/4" BSPP	100 L/min	70-250 bar	4.25:1
KPBV 250/1/D	MV	Dual	1" BSPP	1/4" BSPP	200 L/min	70-250 bar	4.25:1

M+S HYDRAULIC
MADE IN EUROPE

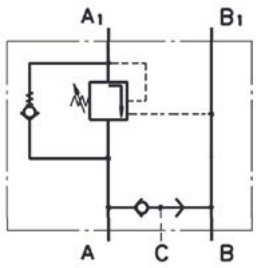

Single

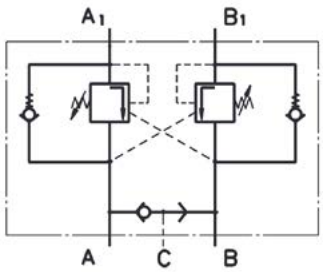

Dual

TECH DATA

Cross Line Relief Valve

Part #	Motor Type	Cartridge	Ports	Max. Cont. Flow	Pressure Range
KPDR 210	MP, MR, MH, MPYN, MRYN	Dual	1/2" BSPP	60 L/min	50-210 bar
KPDS 210	MS	Dual	1/2" BSPP	60 L/min	50-210 bar
KPDT 210	MT	Dual	3/4" BSPP	120 L/min	80-210 bar
KPDV 250	MV	Dual	1" BSPP	200 L/min	20-250 bar

M+S HYDRAULIC
MADE IN EUROPE

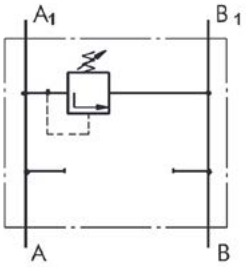

Single

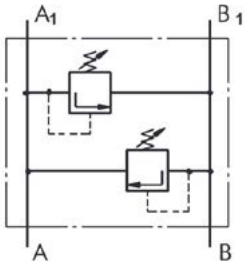

Dual

TECH DATA

Overcentre and Crossline Relief Valve combined with Brake Release Port

Part #	Motor Type	Cartridge	A/B Ports	C Ports	Flow	Relief Press.	Overcentre Press.	Pilot Ratio
KPDBR210-250/1/D	MP, MR, MH, MPYN, MRYN	Dual	1/2" BSPP	1/4" BSPP	60 L/min	210 bar	250 bar	4.25:1

M+S HYDRAULIC
MADE IN EUROPE

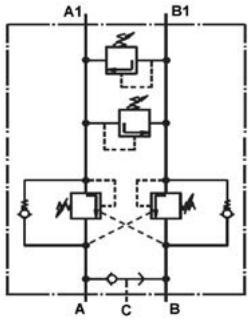

TECH DATA

Shuttle Valve

Part #	Motor Type	A/B Ports	C Ports	Max. Cont. Flow	Max. Cont. Pressure
KPWR	MP, MR, MH, MPYN, MRYN	1/2" BSPP	1/4" BSPP	60 L/min	250 bar
KPWS	MS	1/2" BSPP	1/4" BSPP	60 L/min	250 bar
KPWT	MT	3/4" BSPP	1/4" BSPP	100 L/min	250 bar
KPWV	MV	1" BSPP	1/4" BSPP	200 L/min	250 bar

M+S HYDRAULIC
MADE IN EUROPE

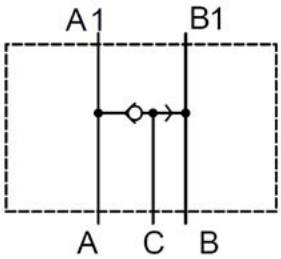

TECH DATA

Handle Operated Directional Control Valve with Relief

Part #	Motor Type	A/B Ports	Max. Cont. Flow	Max. Cont. Pressure Drop
BDR 1205/25A	MP, MR, MH, MPYN, MRYN	1/2" BSPP	50 L/min	30-250 bar
BDS 1205/25A	MS	1/2" BSPP	50 L/min	30-250 bar

capronI
MADE IN EUROPE

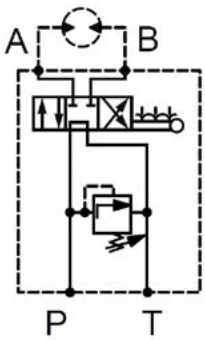

TECH DATA

Cross Line Relief Valve

Part #	Max Flow Rate	Pressure Range	Series	A+B Ports	Bolts
DCF1201	40 L/min	10-40 bar	MP, MR, MPYN, MRYN	1/2" BSPP	M8x40 cap screw
DCF1202	40 L/min	20-210 bar	MP, MR, MPYN, MRYN	1/2" BSPP	M8x40 cap screw
DCF1203	40 L/min	70-350 bar	MP, MR, MPYN, MRYN	1/2" BSPP	M8x40 cap screw
DCM1201	40 L/min	10-40 bar	MSY	1/2" BSPP	M10x40 cap screw
DCM1202	40 L/min	20-210 bar	MSY	1/2" BSPP	M10x40 cap screw
DCM1203	40 L/min	70-350 bar	MSY	1/2" BSPP	M10x40 cap screw

OLEOWEB
MADE IN EUROPE

DCF

DCM

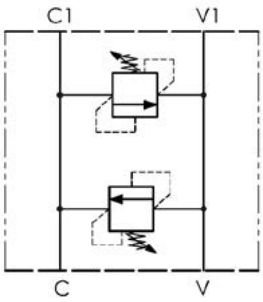

TECH DATA

Dual Counter Balance Valve

Part #	Max Flow Rate	Pressure Range	Series	A+B Ports	Ratio	Bolts
DCVB1201S	60 L/min	30-210 bar	MP, MR, MPYN, MRYN	1/2" BSPP	1:4.25	M8x50 Cap Screw (x4)

OLEOWEB
MADE IN EUROPE

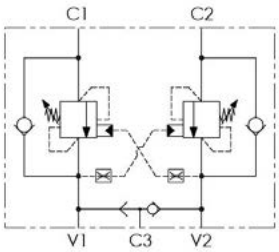

TECH DATA

Single Counter Balance Valve

Part #	Max Flow Rate	Pressure Range	Series	A+B Ports	Ratio	Bolts
SCVB1201S	60 L/min	30-210 bar	MP, MR, MPYN, MRYN	1/2" BSPP	1:4.25	M8x50 Cap Screw (x4)

OLEOWEB
MADE IN EUROPE

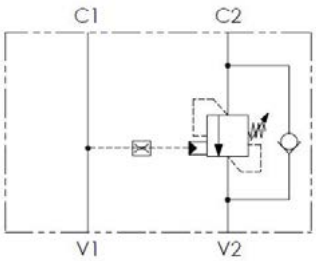

TECH DATA

Priority Flow Control Valve

Part #	Max Flow Rate	Max Pressure	Max Adj. Flow	Series	A+B Ports
PVETOMP03	60 L/min	250 bar	50 L/min	MP, MR, MPYN, MRYN	1/2" BSPP

MADE IN EUROPE

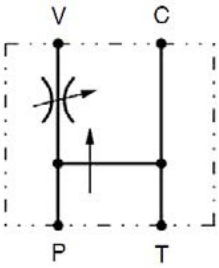

TECH DATA

Anti-Cavitation (rundown) Check Valve

Part #	Max Flow Rate	Max Pressure	Cracking Pressure	Series	A+B Ports
ACVOMS03	50 L/min	250 bar	0.5 bar	MS	1/2" BSPP
ACVOMP03	50 L/min	250 bar	0.5 bar	MP, MR, MPYN, MRYN	1/2" BSPP

MADE IN EUROPE

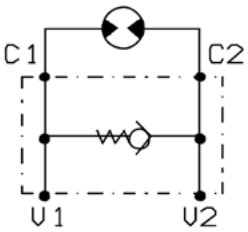

TECH DATA

HKU Series Steering Orbital

Configuration: Open centre, non-load reaction, Ports: 1/2" BSPP

Part #	DISPLACEMENT	ROTOR	FLOW	PRESSURE DROP	PRESSURE TANK	WEIGHT
	(cc)	Width L1 (mm)	Max. Cont. (L/min)	Max. Cont. (Bar)	(Bar)	(Kg)
HKU 40/4	39.6	6.5	4	140	25	5.3
HKU 50/4	49.5	6.5	5	140	25	5.4
HKU 63/4	65.6	8.2	6	170	25	5.5
HKU 80/4	79.2	10.6	8	170	25	5.6
HKU 100/4	99.0	13.2	10	170	25	5.7
HKU 125/4	123.8	16.6	13	170	25	5.8
HKU 160/4	158.4	20.8	16	170	25	6.0
HKU 200/4	198.0	26.6	20	170	25	6.3
HKU 250/4	247.5	32.9	25	170	25	6.5
HKU 320/4	316.8	42.7	32	170	25	7.0
HKU 400/4	396.0	52.9	40	170	25	7.4
HKU 500/4	495.0	61.2	50	170	25	8.0
HKU 630/4	623.6	83.6	63	140	25	8.7
HKU 800/4	793.0	110.7	70	140	25	9.6
HKU 1000/4	990.0	133.2	70	100	25	10.6

Nomenclature

HKU

RELIEF

Code	Description
S	Built-in relief & shock valves
LS	Built-in relief & shock valves for use with DT (500-100cc)

DISP.

40-1000cc

CONFIGURATION

Code	Description
4	Open centre non-load reaction
3	Open centre load reaction
7	Closed centre non-load reaction
5	Load sense static, use with PRD/80 valve
5T	Load sense - static
5DT	Load sense - dynamic*

** for 500-1000cc units, use code HKULS*

RELIEF SETTINGS

Code	Description
150	150 bar relief 200 bar shock valves
175	175 bar relief 240 bar shock valves

OPTIONS

Code	Description
-	1/2" BSPP ports
A	3/4" UNF ports
PB	Power beyond *
H	High pressure shaft seal

** Available for displacements 40-125cc only*

M+S HYDRAULIC
MADE IN EUROPE

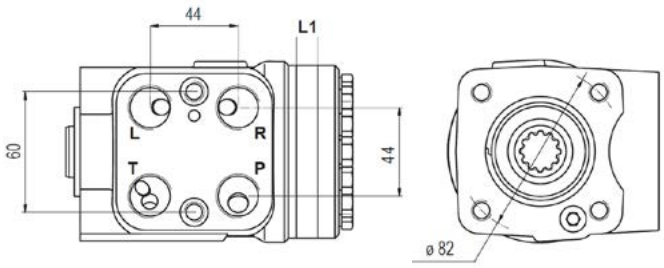

HKU Standard (side & top view)

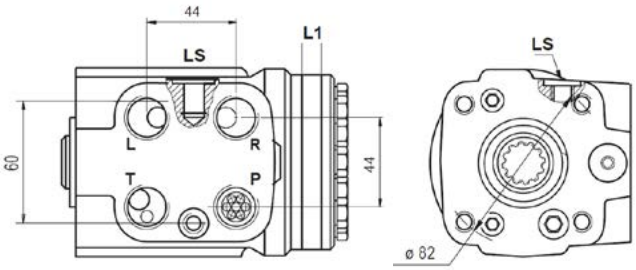

HKUS Load Sense (side & top view)

3 Open centre load reaction

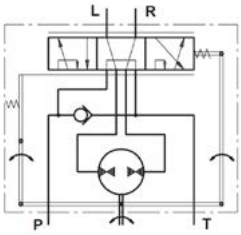

4 Open centre non-load reaction

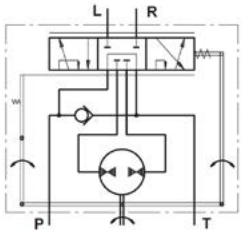

4PB Open centre non-load reaction power beyond

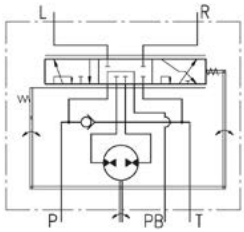

7 Closed centre non-load reaction

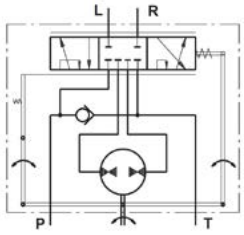

S3 Open centre load reaction relief/shock valve

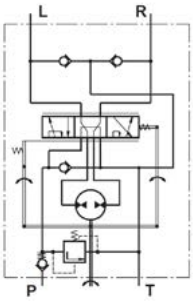

S4 Open centre non-load reaction relief/shock valves

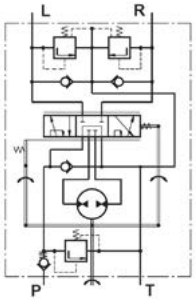

S5T Closed centre load sense relief/shock valve

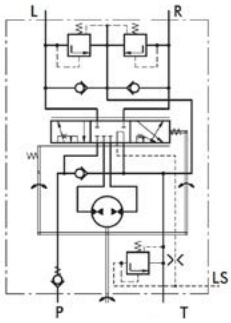

S5 Closed centre load sense PRD/80 valve

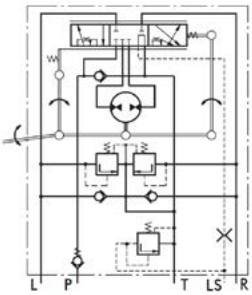

TECH DATA

KK Series Steering Column & Shaft Journal

Part #	Length (mm) L	Weight (kg)
KK75-I	78	0.75
KK150-I	168.2	1.1
KK275-I	278	1.5
KK390-I	393	1.9
KK465-I	465	2.5
KK750-I	777.8	3.3
SJ-HKU	Shaft journal - to suit HKU series steering orbitals	
(Option) E	Electrical signal connection	
(Option) F	Mounting flange with tabs	

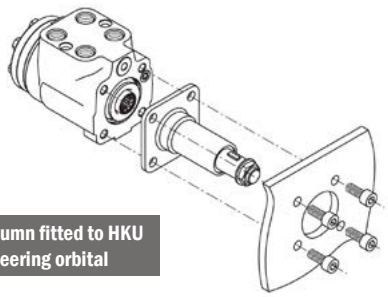

KK column fitted to HKU steering orbital

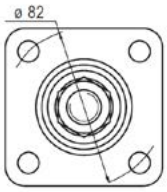

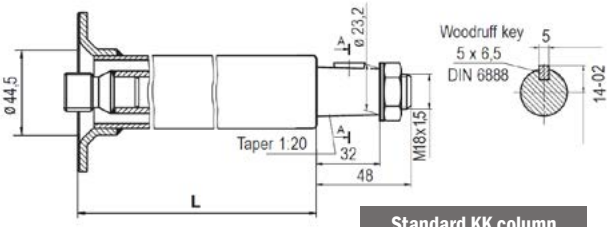

Standard KK column 1:20 taper shaft

TECH DATA

Steering Wheel

Part #	Wheel Dia. (mm)	Column Shaft Input
360 Wheel	362	1:20 tapered
360-S-KNOB	Wheel spinner (for 360 Wheel only)	

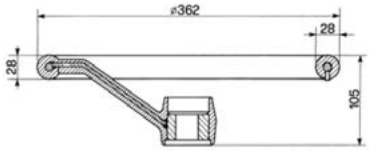

TECH DATA

Relief Valve

Part #	Max Cont Flow	Max Cont Press	Relief Setting	Shock Valves	Weight	Mounting
BKH1-150	80 L/min	160 bar	150 bar	200 bar	1.9 kg	Direct mount

M+S HYDRAULIC
MADE IN EUROPE

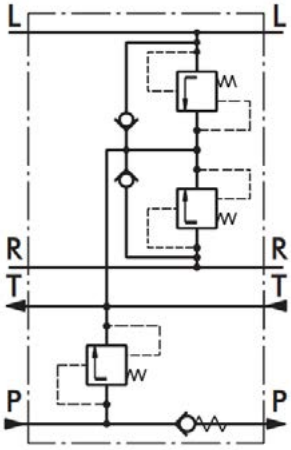

TECH DATA

Priority Valve w/ Load Sense

Part #	Max Cont Flow	Pressure P,EF	Pressure CF,S,#	Pressure R,L	Pressure Tank	Mounting
PRD 80/7	80 L/min	250 bar	210 bar	280 bar	20 bar	Direct mount
PRTA 80/7	80 L/min	250 bar	210 bar	-	-	Inline
PRTAD 80/7	80 L/min	250 bar	210 bar	-	-	Inline

M+S HYDRAULIC
MADE IN EUROPE

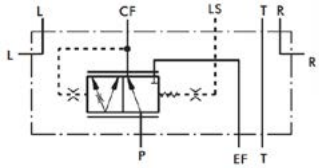

PRD

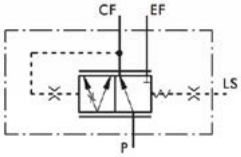

PRTA

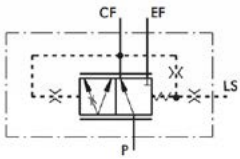

PRTAD

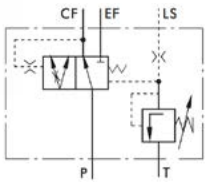

PRT

COMING SOON IN 2026

AXIAL PISTON MOTORS

MEDIUM & HEAVY DUTY, VARIABLE & FIXED DISPLACEMENT

On the way later in 2026 are a range of axial piston motors from M+S Hydraulic, including:

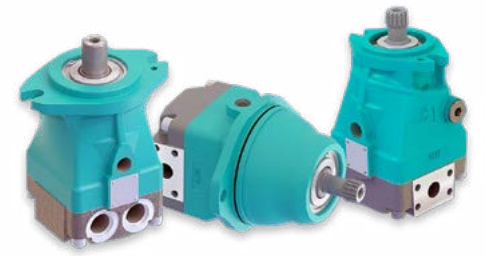

MAM Series Medium Duty	MAP Series Heavy Duty	MA2V Series Heavy Duty
Fixed displacement 20-50cc	Fixed displacement 35-100cc	Variable displacement 25-50cc
Output speed up to 3600 RPM	Output speed up to 4200 RPM	Output speed up to 4000 RPM
Max cont pressure up to 300 bar	Max cont pressure up to 350 bar	Max cont pressure up to 250 bar

Applications:

- Agricultural machines
- Road-building machines
- Mining machinery
- Food industry machines
- Swing drives
- Hydraulic transmissions
- Vibration machines
- Fan drives
- Special vehicles

Options:

- Port options
- Flange options
- Shaft options
- High pressure ports
- Integrated valves

Advantages:

- Smooth operation
- Long service life
- High power density
- High starting torque

M+S HYDRAULIC
MADE IN EUROPE

MELBOURNE

ADDRESS
23 Quinlan Rd, Epping, VIC 3076
EMAIL
sales@hydraulicsnetwork.com.au
PHONE
03 9399 8957

VERMONT

ADDRESS
5/137-145 Rooks Rd, Vermont, VIC 3133
EMAIL
salessev@hydraulicsint.com.au
PHONE
03 9874 1155

BRISBANE

ADDRESS
19 Silvio St, Richlands, QLD 4077
EMAIL
salesqld@hydraulicsnetwork.com.au
PHONE
07 3277 5969

PERTH

ADDRESS
2/44 Vinnicombe Dr, Canning Vale, WA 6155
EMAIL
saleswa@hydraulicsnetwork.com.au
PHONE
08 6385 3555

www.hydraulicsnetwork.com.au

MiMOTION