TECH DATA

MP Series Gerotor Motor

Standard Pricing: Shaft 1" Straight Keyed, Mount SAE A 2-bolt, Ports 1/2" BSPP, Case 1/4" BSPP

Part #	DISPLACEMENT	ROTOR	SPEED	FLOW	PRESSURE DROP	INLET PRESSURE	TORQUE	WEIGHT
	(cc)	Width L1 (mm)	Max. Cont. (RPM)	Max. Cont. (L/min)	Max. Cont. (Bar)	Max. Cont. (Bar)	Max. Cont. (Nm)	(Kg)
MPN 25 COD	28.4	5.2	1408	40	100	175	33	6.1
MPN 32 COD	34.5	6.3	1450	50	100	175	43	6.1
MPN 40 COD	40.5	7.4	1480	60	120	175	62	6.2
MPN 50 COD	49.5	6.67	1210	60	140	175	94	6.3
MPN 60 COD	59.5	8.25	983	60	140	175	110	6.3
MPN 80 COD	79.2	10.67	755	60	140	175	151	6.4
MP 100 COD	99	13.33	605	60	140	175	193	6.6
MP 125 COD	123.8	16.67	486	60	140	175	237	6.7
MP 160 COD	158.4	21.33	378	60	140	175	313	6.9
MP 200 COD	198	26.67	303	60	140	175	366	7.1
MP 250 COD	247.5	33.33	242	60	110	175	380	7.3
MP 315 COD	316.8	42.67	190	60	90	175	380	7.6
MP 400 COD	396	53.33	150	60	70	175	360	8.2
MP 500 COD	495	66.63	120	60	60	140	390	9.4
MP 630 COD	623.6	84	95	60	55	140	440	10.1

To ensure best motor life, fill with fluid and run at moderate load for 5-10 minutes

Equivalent to:
BMP *Hydnet*
MGP/GMP *Bosch Rexroth*
BGE *Brevini*
OMP *Danfoss*
MF *Ross/TRW*
WM(155) *White*

M+S HYDRAULIC
MADE IN EUROPE

Seal Kits

Part #	Pressure Rating without Drain Line
MP-SKD	150 bar ≤100 RPM
MPQ-SKD	150 bar ≤100 RPM
MP-SKU	200 bar ≤200 RPM
MPQ-SKU	200 bar ≤200 RPM
MP-SKV	150 bar ≤100 RPM
MP-SKB	100 bar ≤100 RPM

Nomenclature

MP

MOUNTING		OPTIONS		DISP.	SHAFTS		SHAFT SEALS	
Code	Description	Code	Description	25-630cc	Code	Description	Code	Description
-	SAE A 2-bolt 82.5mm spigot	N	Needle bearings		CO	1" straight keyed	D	150 Bar *
Q	Square 4-bolt 44.4mm spigot	E	Rear ports 1/2" BSPP		C	25mm straight keyed	U	200 Bar * +
F	Magneto 4-bolt 82.5mm spigot				CB	32mm straight keyed	V	150 Bar viton *
W	Wheel mount 80mm spigot				SH	1" 6B splined	RS SHL5	Universal speed sensor 5m lead
WF	Sweepers special mount				HB	1.1/4" 14T splined	ST	Electronic speed sensor
					K	28.56mm 1:10 tapered		
					KB	35mm 1:10 tapered		

** Refer to specifications for performance data*
+ U seal cannot be used with needle bearings

MP — Standard MP Series

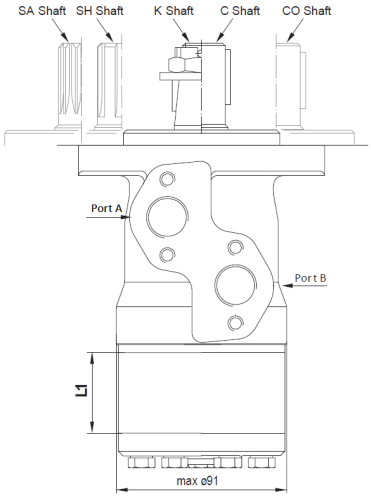

MPQ — MPQ Series

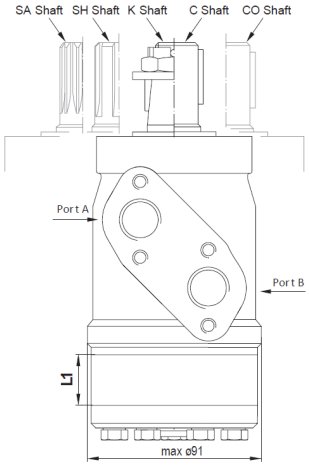

- Standard Mount SAE A 2-bolt

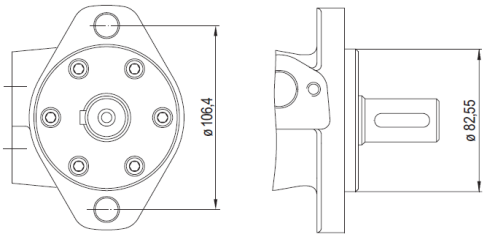

Q — Q Mount M10 4-bolt

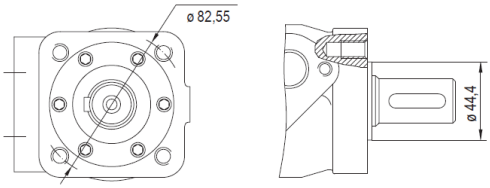

F — Magneto Mount

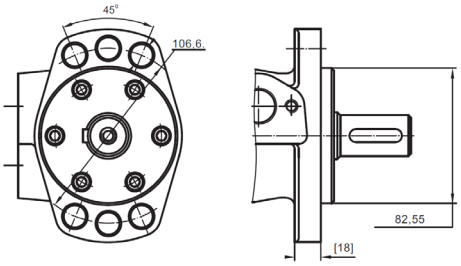

W — Wheel Mount

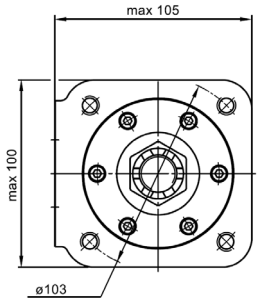

C — 25mm Straight Keyed Shaft

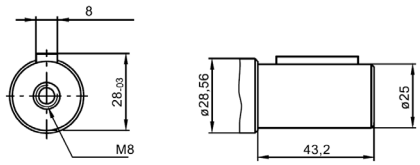

CB — 32mm Straight Keyed Shaft

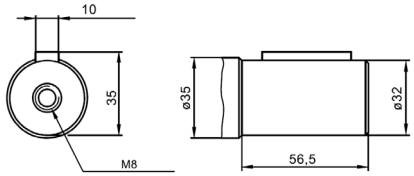

CO — 1" Straight Keyed Shaft

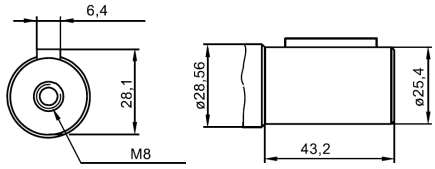

SH — 1" 6B Splined Shaft

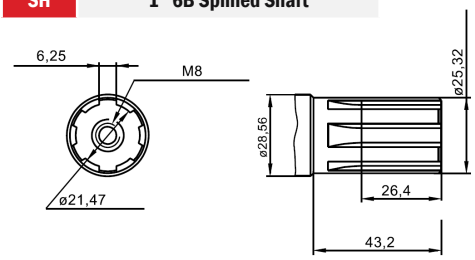

HB — 1.1/4" 14T Splined Shaft

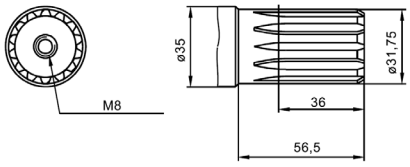

K — 28.56mm 1:10 Tapered Shaft

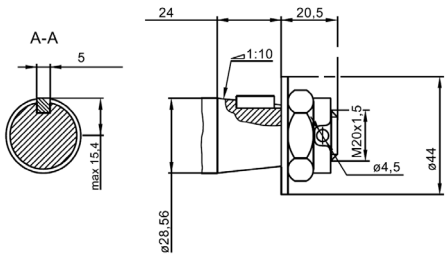
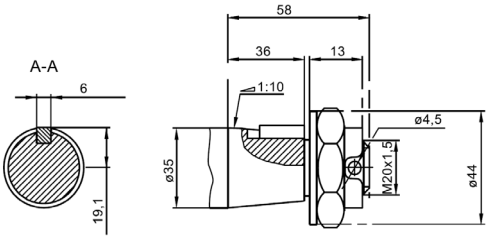
KB — 35mm 1:10 Tapered Shaft