HYDRAULIC MOTORS MP

APPLICATION

- Conveyors
- Feeding mechanism of robots and manipulators
- Metal working machines
- Textile machines
- Agricultural machines
- Food industries
- Grass cutting machinery etc.

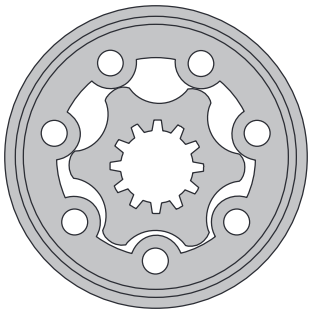

CONTENTS

Specification data .....14÷17
Function diagrams .....18÷24
Dimensions and mounting ..... 25÷26
Wheel motor 27
Shaft extensions 28
Permissible shaft loads 29
Permissible shaft Seal Pressure ... 30
Order code 31

OPTIONS

- Model - Spool valve, gerotor
- Flange and wheel mount
- Motor with needle bearing
- Side and rear ports
- Shafts - straight, splined and tapered
- Shaft seal for high and low pressure
- Metric and BSPP ports
- Speed sensoring
- Other special features

GENERAL

Max. Displacement, cm^3/rev [in^3/rev]	623,6 [38.05]
Max. Speed, [RPM]	1815
Max. Torque, daNm [lb-in]	cont.:50 [4415] int.: 64 [5565]
Max. Output, kW [HP]	12,8 [17.1]
Max. Pressure Drop, bar [PSI]	cont.:140 [2030] int.: 175 [2540]
Max. Oil Flow, lpm [GPM]	75 [19.8]
Min. Speed, [RPM]	10
Pressure fluid	Mineral based- HLP(DIN 51524) or HM(ISO 6743/4)
Temperature range, ^oC [^oF]	-40÷140 [-40÷284]
Optimal Viscosity range, mm^2/s [SUS]	20÷75 [98÷347]
Filtration	ISO code: 18/16/13 According to ISO 4406-1999

Oil flow in drain line

Pressure drop bar [PSI]	Viscosity mm^2/s [SUS]	Oil flow in drain line lpm [GPM]
100 [1450]	20 [98]	2,5 [.660]
	35 [164]	1,8 [.476]
140 [2030]	20 [98]	3,5 [.925]
	35 [164]	2,8 [.740]

Pressure Losses

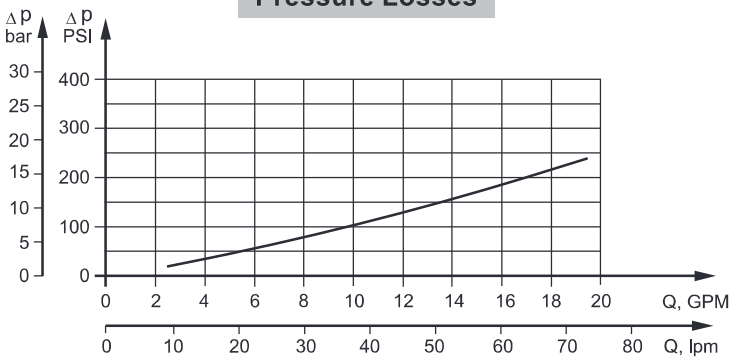

SPECIFICATION DATA

Specification Data for MP... motors with **C**, **CO**, **SH**, **K** and **SA** shafts.
(ø28,56 sealing diameter)

Type		MP 25	MP 32	MP 40	MP 50	MP 80	MP 100	MP 125
Displacement, cm³/rev [in³/rev]		28,4 [1.73]	34,5 [2,1]	40,5 [2.47]	49,5 [3.02]	79,2 [4.83]	99 [6.04]	123,8 [7.55]
Max. Speed,	Cont.	1408	1450	1480	1210	755	605	486
[RPM]	Int.*	1584	1594	1555	1515	945	755	605
Max. Torque	Cont.	3,3 [290]	4,3 [380]	6,2 [550]	9,4 [835]	15,1 [1340]	19,3 [1710]	23,7 [2100]
daNm [lb-in]	Int.*	4,7 [415]	6,1 [540]	8,2 [730]	11,9 [1050]	19,5 [1725]	23,7 [2100]	29,8 [2640]
	Peak**	6,7 [595]	8,6 [760]	10,7 [950]	14,3 [1285]	22,4 [1985]	27,5 [2435]	36,5 [3235]
Max. Output	Cont.	4,5 [6.0]	5,8 [7.8]	8,4 [11.5]	10,1 [13.5]	10,2 [13.7]	10,5 [14.1]	10,2 [13.7]
kW [HP]	Int.*	6,1 [8.2]	7,8 [10.5]	11,6 [15.5]	12,2 [16.1]	12,5 [16.8]	12,8 [17.1]	12 [16.1]
Max. Pressure Drop	Cont.	100 [1450]	100 [1450]	120 [1750]	140 [2030]	140 [2030]	140 [2030]	140 [2030]
bar [PSI]	Int.*	140 [2030]	140 [2030]	155 [2250]	175 [2540]	175 [2540]	175 [2540]	175 [2540]
	Peak**	225 [3260]	225 [3260]	225 [3260]	225 [3260]	225 [3260]	225 [3260]	225 [3260]
Max. Oil Flow	Cont.	40 [10.5]	50 [13.2]	60 [15.9]	60 [15.9]	60 [15.9]	60 [15.9]	60 [15.9]
lpm [GPM]	Int.*	45 [11.9]	55 [14.5]	70 [18.5]	75 [19.8]	75 [19.8]	75 [19.8]	75 [19.8]
Max. Inlet Pressure	Cont.	175 [2540]	175 [2540]	175 [2540]	175 [2540]	175 [2540]	175 [2540]	175 [2540]
bar [PSI]	Int.*	200 [2900]	200 [2900]	200 [2900]	200 [2900]	200 [2900]	200 [2900]	200 [2900]
	Peak**	225 [3260]	225 [3260]	225 [3260]	225 [3260]	225 [3260]	225 [3260]	225 [3260]
Max. Return Pressure	Cont.	175 [2540]	175 [2540]	175 [2540]	175 [2540]	175 [2540]	175 [2540]	175 [2540]
with Drain Line	Int.*	200 [2900]	200 [2900]	200 [2900]	200 [2900]	200 [2900]	200 [2900]	200 [2900]
bar [PSI]	Peak**	225 [3260]	225 [3260]	225 [3260]	225 [3260]	225 [3260]	225 [3260]	225 [3260]
Max. Starting Pressure with Unloaded Shaft, bar [PSI]		10 [145]	10 [145]	10 [145]	10 [145]	10 [145]	10 [145]	9 [131]
Min. Starting Torque	At max.press. drop Cont.	3,0 [265]	4,0 [355]	5,4 [480]	7,8 [690]	13,2 [1170]	16,6 [1470]	20,7 [1830]
daNm [lb-in]	At max.press. drop Int.*	4,2 [370]	5,6 [500]	6,8 [600]	10 [885]	16,8 [1490]	21 [1860]	26,6 [2360]
Min. Speed*, [RPM]**		20	15	10	10	10	10	10
Weight, kg [lb]	MP(F)(N)	5,6 [12.3]	5,6 [12.3]	5,7 [12.6]	5,8 [12.8]	5,9 [13.2]	6,1 [13.5]	6,2 [13.7]
For rear ports	MPW(N)	5,3 [11.7]	5,3 [11.7]	5,4 [11.9]	5,5 [12.1]	5,6 [12.4]	5,8 [12.8]	5,9 [13]
+0,450 [.992]	MPQ(N)	5,0 [11.1]	5,0 [11.1]	5,1 [11.2]	5,2 [11.5]	5,3 [11.7]	5,5 [12.1]	5,6 [12.3]

* Intermittent operation: the permissible values may occur for max. 10% of every minute.
** Peak load: the permissible values may occur for max. 1% of every minute.
*** For speeds lower than given, consult factory or your regional manager.

1. Intermittent speed and intermittent pressure must not occur simultaneously.
2. Recommended filtration is per ISO cleanliness code 20/16. A nominal filtration of 25 micron or better.
3. Recommend using a premium quality, anti-wear type mineral based hydraulic oil HLP(DIN51524) or HM (ISO 6743/4). If using synthetic fluids consult the factory for alternative seal materials.
4. Recommended minimum oil viscosity 13 mm²/s [70 SUS] at 50°C [122°F].
5. Recommended maximum system operating temperature is 82°C [180°F].
6. To assure optimum motor life fill with fluid prior to loading and run at moderate load and speed for 10-15 minutes.

SPECIFICATION DATA (continued)

Specification Data for MP... motors with **C**, **CO**, **SH**, **K** and **SA** shafts.
(ø28,56 sealing diameter)

Type		MP 160	MP 200	MP 250	MP 315	MP 400	MP 500	MP 630
Displacement, cm³/rev [in³/rev]		158,4 [9.66]	198 [12.1]	247,5 [15.1]	316,8 [19.3]	396 [24.16]	495 [30.2]	623,6 [38.05]
Max. Speed,	Cont.	378	303	242	190	150	120	95
[RPM]	Int.*	472	378	303	236	189	150	120
Max. Torque	Cont.	31,3 [2770]	36,6 [3240]	38 [3360]	38 [3360]	36 [3190]	39 [3452]	44 [3895]
daNm [lb-in]	Int.*	37,8 [3345]	45,6 [4035]	58,3 [5160]	56 [4960]	59 [5240]	57 [5045]	64 [5665]
	Peak**	43,8 [3880]	55 [4870]	68,5 [6060]	85 [7505]	85,4 [7560]	78 [6903]	82 [7257]
Max. Output	Cont.	10,1 [13.5]	10 [13.5]	7,5 [10]	5,8 [7.9]	4,6 [6.2]	3,5 [4.7]	3,3 [4.4]
kW [HP]	Int.*	12,1 [16.2]	12 [16.1]	12 [16.1]	9 [12.1]	7,8 [10.5]	7,2 [9.7]	5,6 [7.5]
Max. Pressure Drop	Cont.	140 [2030]	140 [2030]	110 [1600]	90 [1300]	70 [1015]	60 [870]	55 [800]
bar [PSI]	Int.*	175 [2540]	175 [2540]	175 [2540]	140 [2030]	115 [1665]	90 [1305]	80 [1160]
	Peak**	225 [3260]	225 [3260]	225 [3260]	225 [3260]	180 [2610]	130 [1885]	110 [1740]
Max. Oil Flow	Cont.	60 [15.9]	60 [15.9]	60 [15.9]	60 [15.9]	60 [15.9]	60 [15.9]	60 [15.9]
lpm [GPM]	Int.*	75 [19.8]	75 [19.8]	75 [19.8]	75 [19.8]	75 [19.8]	75 [19.8]	75 [19.8]
Max. Inlet Pressure	Cont.	175 [2540]	175 [2540]	175 [2540]	175 [2540]	175 [2540]	140 [2030]	140 [2030]
bar [PSI]	Int.*	200 [2900]	200 [2900]	200 [2900]	200 [2900]	200 [2900]	175 [2540]	175 [2540]
	Peak**	225 [3260]	225 [3260]	225 [3260]	225 [3260]	225 [3260]	225 [3260]	225 [3260]
Max. Return Pressure	Cont.	175 [2540]	175 [2540]	175 [2540]	175 [2540]	175 [2540]	140 [2030]	140 [2030]
with Drain Line	Int.*	200 [2900]	200 [2900]	200 [2900]	200 [2900]	200 [2900]	175 [2540]	175 [2540]
bar [PSI]	Peak**	225 [3260]	225 [3260]	225 [3260]	225 [3260]	225 [3260]]	225 [3260]	225 [3260]
Max. Starting Pressure with Unloaded Shaft, bar [PSI]		8 [116]	7 [100]	6 [87]	5 [73]	5 [73]	5 [73]	5 [73]
Min. Starting Torque	At max.press. drop Cont.	28,2 [2500]	33,5 [2950]	33,6 [2970]	34,4 [3045]	34,5 [3050]	36 [3180]	41,5 [3670]
daNm [lb-in]	At max.press. drop Int.*	35,5 [3140]	42,6 [3770]	54,2 [4795]	61,9 [5480]	60,8 [5390]	54 [4780]	62 [5480]
Min. Speed*, [RPM]**		10	10	10	10	10	10	10
Weight, kg [lb]	MP(F)(N)	6,4 [14.1]	6,6 [14.6]	6,8 [15]	7,1 [15.6]	7,6 [16.8]	8,9 [20]	9,5 [21.4]
For rear ports	MPW(N)	6,1 [13.5]	6,3 [13.9]	6,5 [14.3]	6,8 [15]	7,2 [15.9]	8,6 [19]	9,2 [20.3]
+0,450 [.992]	MPQ(N)	5,8 [12.8]	6 [13.2]	6,2 [13.7]	6,5 [14.3]	6,8 [15]	8,3 [18.3]	9 [19.8]

* Intermittent operation: the permissible values may occur for max. 10% of every minute.
** Peak load: the permissible values may occur for max. 1% of every minute.
*** For speeds lower than given, consult factory or your regional manager.

1. Intermittent speed and intermittent pressure must not occur simultaneously.
2. Recommended filtration is per ISO cleanliness code 20/16. A nominal filtration of 25 micron or better.
3. Recommend using a premium quality, anti-wear type mineral based hydraulic oil HLP(DIN51524) or HM (ISO 6743/4). If using synthetic fluids consult the factory for alternative seal materials.
4. Recommended minimum oil viscosity 13 mm²/s [70 SUS] at 50°C [122°F].
5. Recommended maximum system operating temperature is 82°C [180°F].
6. To assure optimum motor life fill with fluid prior to loading and run at moderate load and speed for 10-15 minutes.

SPECIFICATION DATA (continued)

Specification Data for MP... motors with **CB**, **KB**, **OB** and **HB** shafts.
(ø35 sealing diameter)

Type		MP 80	MP 100	MP 125	MP 160	MP 200
Displacement, cm³/rev [in³/rev]		79,2 [4.83]	99 [6.04]	123,8 [7.55]	158,4 [9.66]	198 [12.1]
Max. Speed,	Cont.	755	605	486	378	303
[RPM]	Int.*	945	755	605	472	378
Max. Torque	Cont.	15,1 [1340]	19,3 [1710]	23,7 [2100]	31,3 [2770]	36,6 [3240]
daNm [lb-in]	Int.*	19,5 [1725]	23,7 [2100]	29,8 [2640]	37,8 [3345]	45,6 [4035]
	Peak**	22,4 [1985]	27,5 [2435]	36,5 [3235]	43,8 [3880]	55 [4870]
Max. Output	Cont.	10,2 [13.7]	10,5 [14.1]	10,2 [13.7]	10,1 [13.5]	10 [13.5]
kW [HP]	Int.*	12,5 [16.8]	12,8 [17.1]	12 [16.1]	12,1 [16.2]	12 [16.1]
Max. Pressure Drop	Cont.	140 [2030]	140 [2030]	140 [2030]	140 [2030]	140 [2030]
bar [PSI]	Int.*	175 [2540]	175 [2540]	175 [2540]	175 [2540]	175 [2540]
	Peak**	225 [3260]	225 [3260]	225 [3260]	225 [3260]	225 [3260]
Max. Oil Flow	Cont.	60 [15.9]	60 [15.9]	60 [15.9]	60 [15.9]	60 [15.9]
lpm [GPM]	Int.*	75 [19.8]	75 [19.8]	75 [19.8]	75 [19.8]	75 [19.8]
Max. Inlet Pressure	Cont.	175 [2540]	175 [2540]	175 [2540]	175 [2540]	175 [2540]
bar [PSI]	Int.*	200 [2900]	200 [2900]	200 [2900]	200 [2900]	200 [2900]
	Peak**	225 [3260]	225 [3260]	225 [3260]	225 [3260]	225 [3260]
Max. Return Pressure	Cont.	175 [2540]	175 [2540]	175 [2540]	175 [2540]	175 [2540]
with Drain Line	Int.*	200 [2900]	200 [2900]	200 [2900]	200 [2900]	200 [2900]
bar [PSI]	Peak**	225 [3260]	225 [3260]	225 [3260]	225 [3260]	225 [3260]
Max. Starting Pressure with Unloaded Shaft, bar [PSI]		10 [145]	10 [145]	9 [131]	8 [116]	7 [100]
Min. Starting Torque	At max.press. drop Cont.	13,2 [1170]	16,6 [1470]	20,7 [1830]	28,2 [2500]	33,5 [2950]
daNm [lb-in]	At max.press. drop Int.*	16,8 [1490]	21 [1860]	26,6 [2360]	35,5 [3140]	42,6 [3770]
Min. Speed*, [RPM]**		10	10	10	10	10
Weight, kg [lb] **For rear ports +0,450 [.992]**	MP(F)...B	6 [13.2]	6,2 [13.7]	6,3 [13.9]	6,5 [14.3]	6,7 [14.8]

* Intermittent operation: the permissible values may occur for max. 10% of every minute.
** Peak load: the permissible values may occur for max. 1% of every minute.
*** For speeds lower than given, consult factory or your regional manager.

1. Intermittent speed and intermittent pressure must not occur simultaneously.
2. Recommended filtration is per ISO cleanliness code 20/16. A nominal filtration of 25 micron or better.
3. Recommend using a premium quality, anti-wear type mineral based hydraulic oil HLP(DIN51524) or HM (ISO 6743/4). If using synthetic fluids consult the factory for alternative seal materials.
4. Recommended minimum oil viscosity 13 mm²/s [70 SUS] at 50°C [122°F].
5. Recommended maximum system operating temperature is 82°C [180°F].
6. To assure optimum motor life fill with fluid prior to loading and run at moderate load and speed for 10-15 minutes.

SPECIFICATION DATA (continued)

Specification Data for MP... motors with **CB**, **KB**, **OB** and **HB** shafts.
(ø35 sealing diameter)

Type		MP 250	MP 315	MP 400	MP 500	MP 630
Displacement, cm³/rev [in³/rev]		247,5 [15.1]	316,8 [19.3]	396 [24.16]	495 [30.2]	623,6 [38.05]
Max. Speed,	Cont.	242	190	150	120	95
[RPM]	Int.*	303	236	189	150	120
Max. Torque	Cont.	47 [4160]	48 [4360]	50 [4415]	39 [3452]	44 [3895]
daNm [lb-in]	Int.*	58,3 [5160]	56 [4960]	59 [5240]	57 [5045]	64 [5665]
	Peak**	68,5 [6060]	85 [7505]	85,4 [7560]	78 [6903]	82 [7257]
Max. Output	Cont.	9 [12.1]	7,6 [10.2]	6,2 [8.3]	3,5 [4.7]	3,3 [4.4]
kW [HP]	Int.*	12 [16.1]	9 [12.1]	7,8 [10.5]	7,2 [9.7]	5,6 [7.5]
Max. Pressure Drop	Cont.	140 [2030]	120 [1740]	95 [1400]	60 [870]	55 [800]
bar [PSI]	Int.*	175 [2540]	140 [2030]	115 [1670]	90 [1305]	80 [1160]
	Peak**	225 [3260]	225 [3260]	180 [2610]	130 [1885]	110 [1740]
Max. Oil Flow	Cont.	60 [15.9]	60 [15.9]	60 [15.9]	60 [15.9]	60 [15.9]
lpm [GPM]	Int.*	75 [19.8]	75 [19.8]	75 [19.8]	75 [19.8]	75 [19.8]
Max. Inlet Pressure	Cont.	175 [2540]	175 [2540]	175 [2540]	140 [2030]	140 [2030]
bar [PSI]	Int.*	200 [2900]	200 [2900]	200 [2900]	175 [2540]	175 [2540]
	Peak**	225 [3260]	225 [3260]	225 [3260]	225 [3260]	225 [3260]
Max. Return Pressure	Cont.	175 [2540]	175 [2540]	175 [2540]	140 [2030]	140 [2030]
with Drain Line	Int.*	200 [2900]	200 [2900]	200 [2900]	175 [2540]	175 [2540]
bar [PSI]	Peak**	225 [3260]	225 [3260]	225 [3260]	225 [3260]	225 [3260]
Max. Starting Pressure with Unloaded Shaft, bar [PSI]		6 [87]	5 [73]	5 [73]	5 [73]	5 [73]
Min. Starting Torque	At max.press. drop Cont.	42,8 [3790]	4050 [45,8]	46,8 [4140]	36 [3180]	41,5 [3670]
daNm [lb-in]	At max.press. drop Int.*	54,2 [4795]	5480 [61,9]	60,8 [5390]	54 [4780]	62 [5480]
Min. Speed*, [RPM]**		10	10	10	10	10
Weight, kg [lb] **For rear ports +0,450 [.992]**	MP(F)...B	6,9 [15.2]	7,2 [15.9]	7,7 [17]	9,0 [19.9]	9,6 [21.2]

* Intermittent operation: the permissible values may occur for max. 10% of every minute.
** Peak load: the permissible values may occur for max. 1% of every minute.
*** For speeds lower than given, consult factory or your regional manager.

1. Intermittent speed and intermittent pressure must not occur simultaneously.
2. Recommended filtration is per ISO cleanliness code 20/16. A nominal filtration of 25 micron or better.
3. Recommend using a premium quality, anti-wear type mineral based hydraulic oil HLP(DIN51524) or HM (ISO 6743/4). If using synthetic fluids consult the factory for alternative seal materials.
4. Recommended minimum oil viscosity 13 mm²/s [70 SUS] at 50°C [122°F].
5. Recommended maximum system operating temperature is 82°C [180°F].
6. To assure optimum motor life fill with fluid prior to loading and run at moderate load and speed for 10-15 minutes.

FUNCTION DIAGRAMS

MP 25

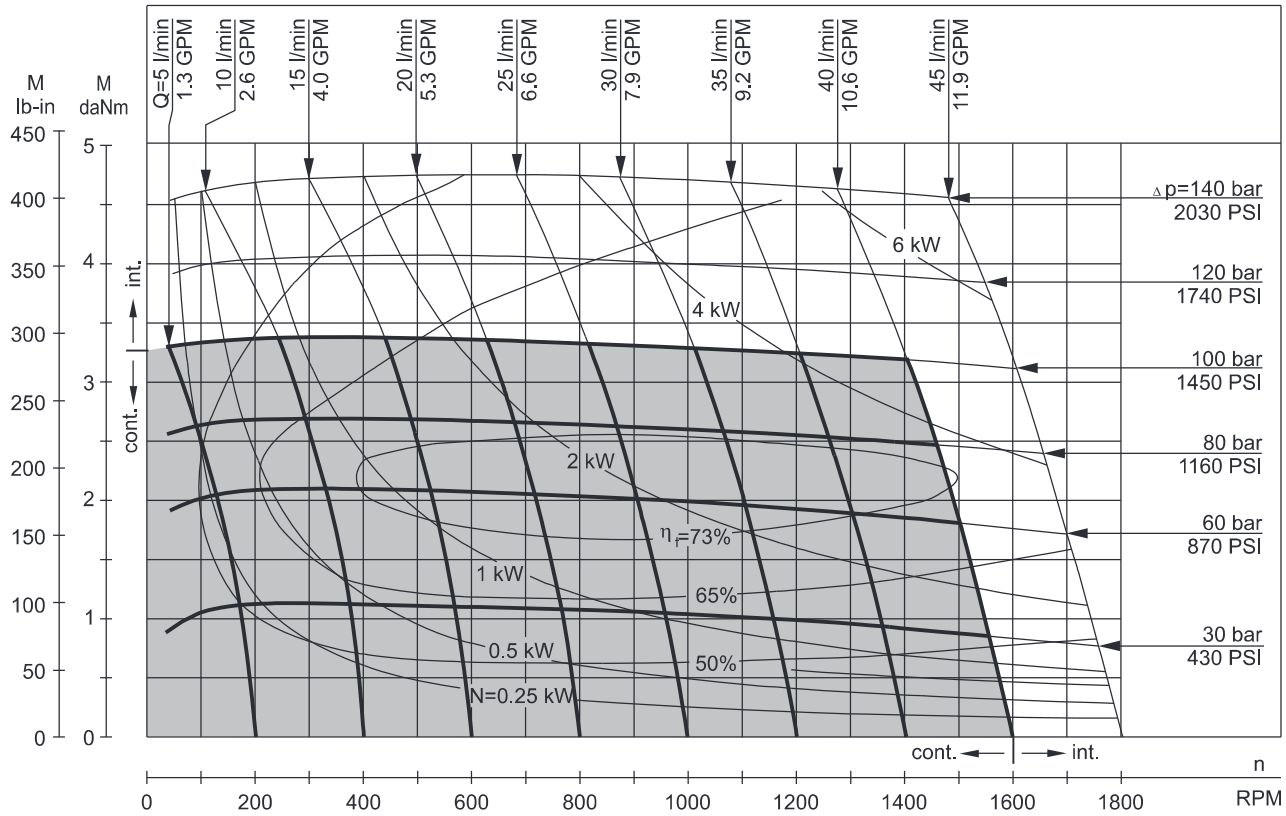

MP 32

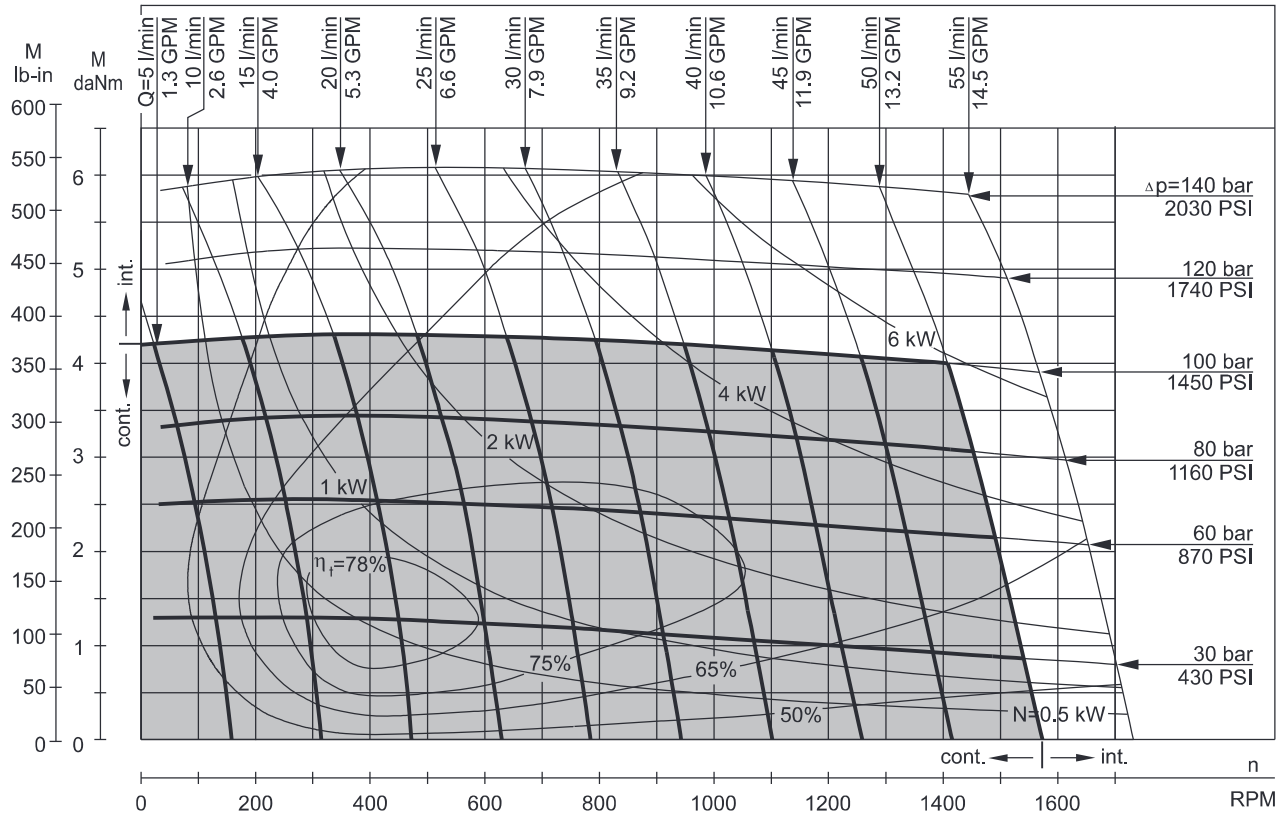

The function diagrams data is for average performance of randomly selected motors at back pressure 5÷10 bar [72.5÷145 PSI] and oil with viscosity of 32 mm²/s [150 SUS] at 50°C [122°F].

FUNCTION DIAGRAMS

MP 40

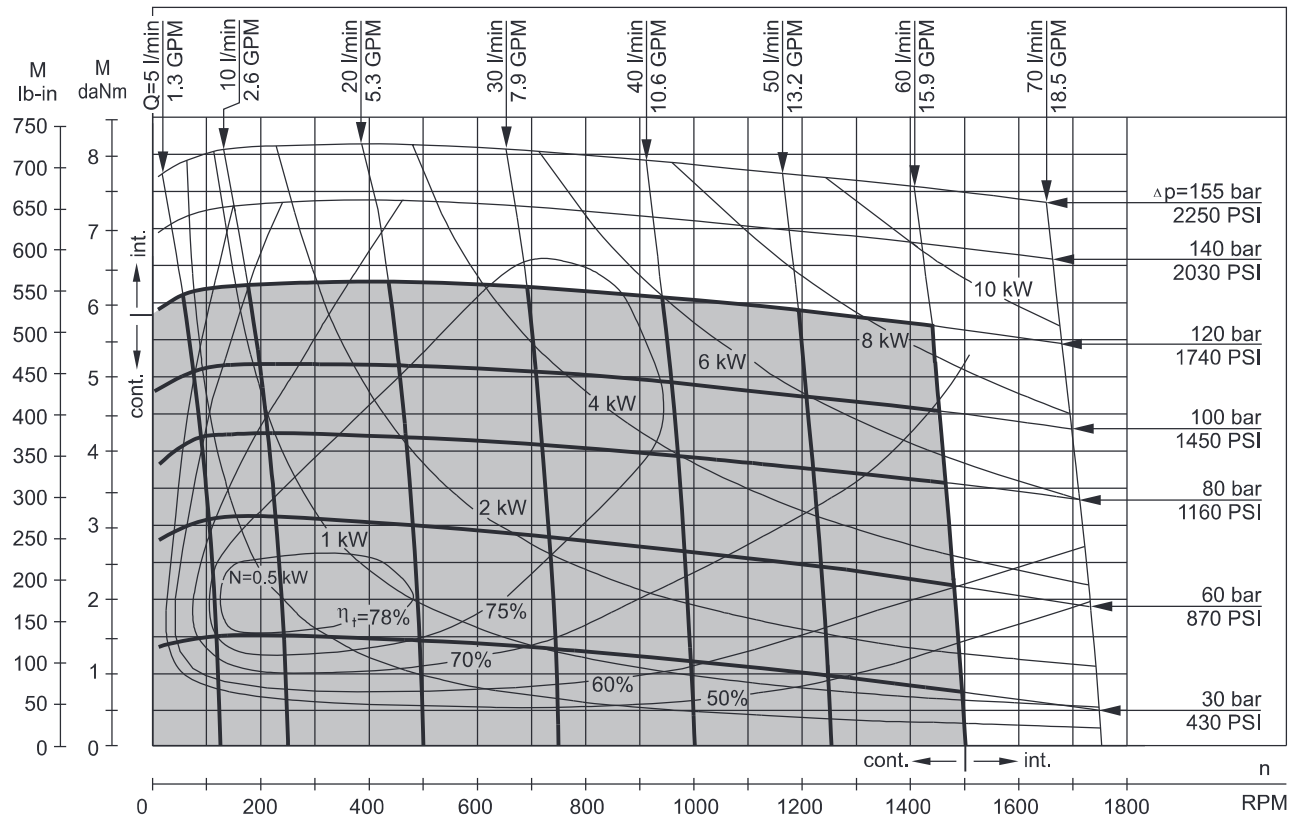

MP 50

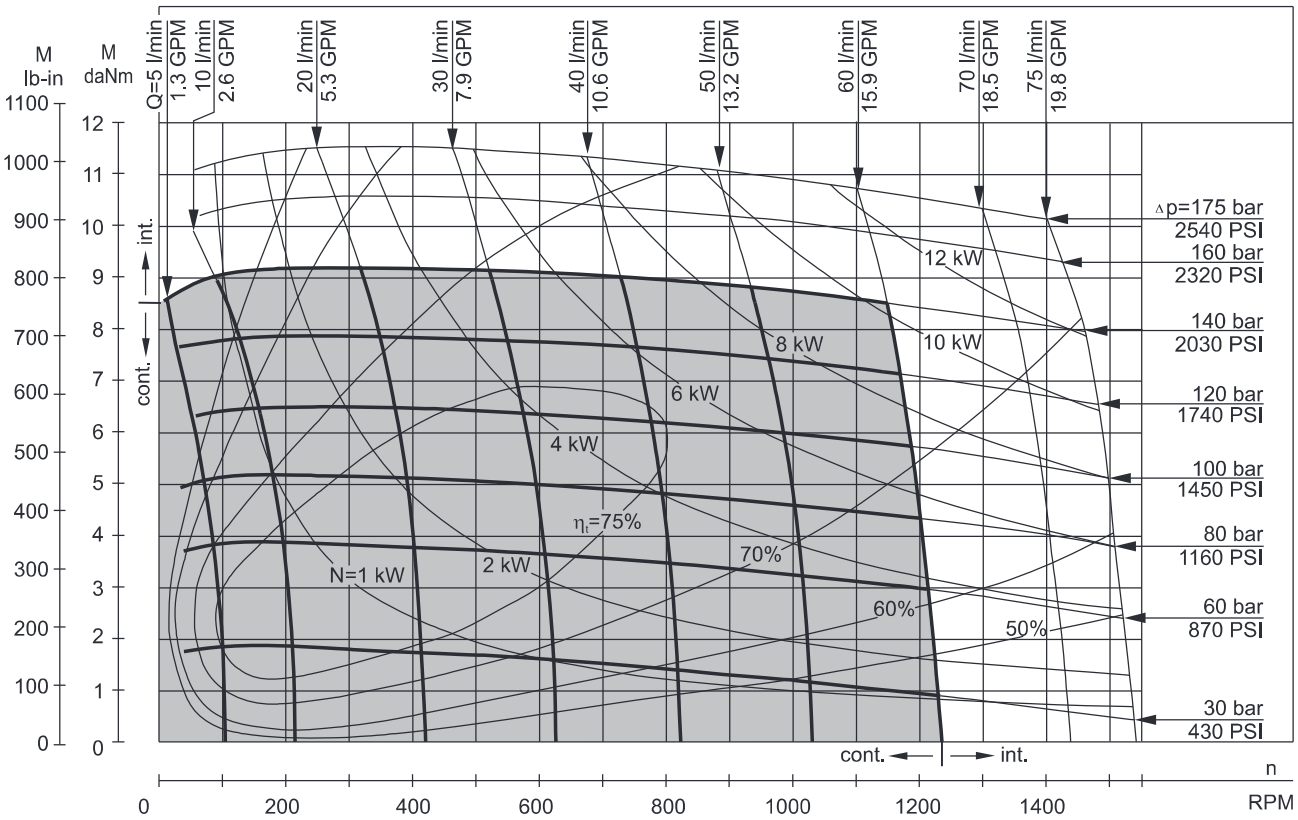

The function diagrams data is for average performance of randomly selected motors at back pressure 5÷10 bar [72.5÷145 PSI] and oil with viscosity of 32 mm²/s [150 SUS] at 50°C [122°F].

FUNCTION DIAGRAMS

MP 80

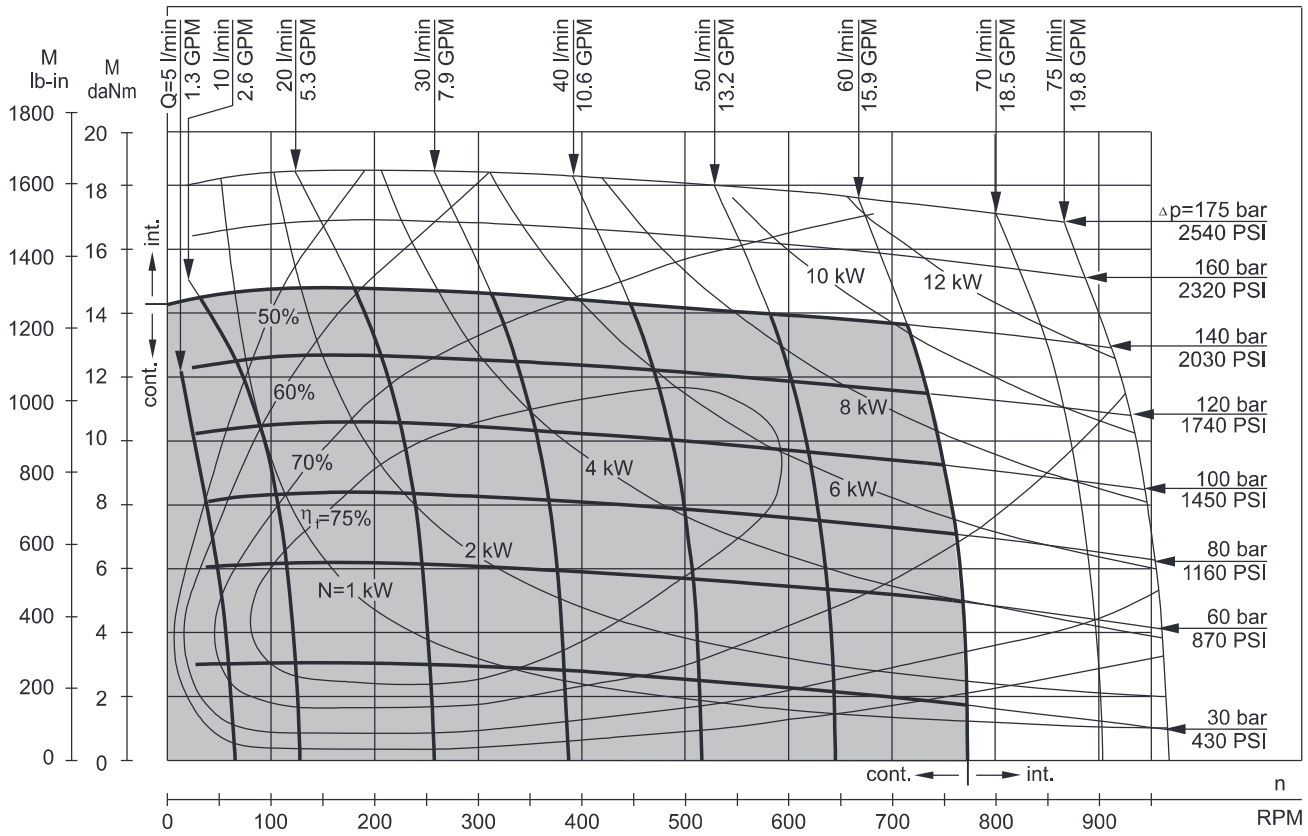

MP 100

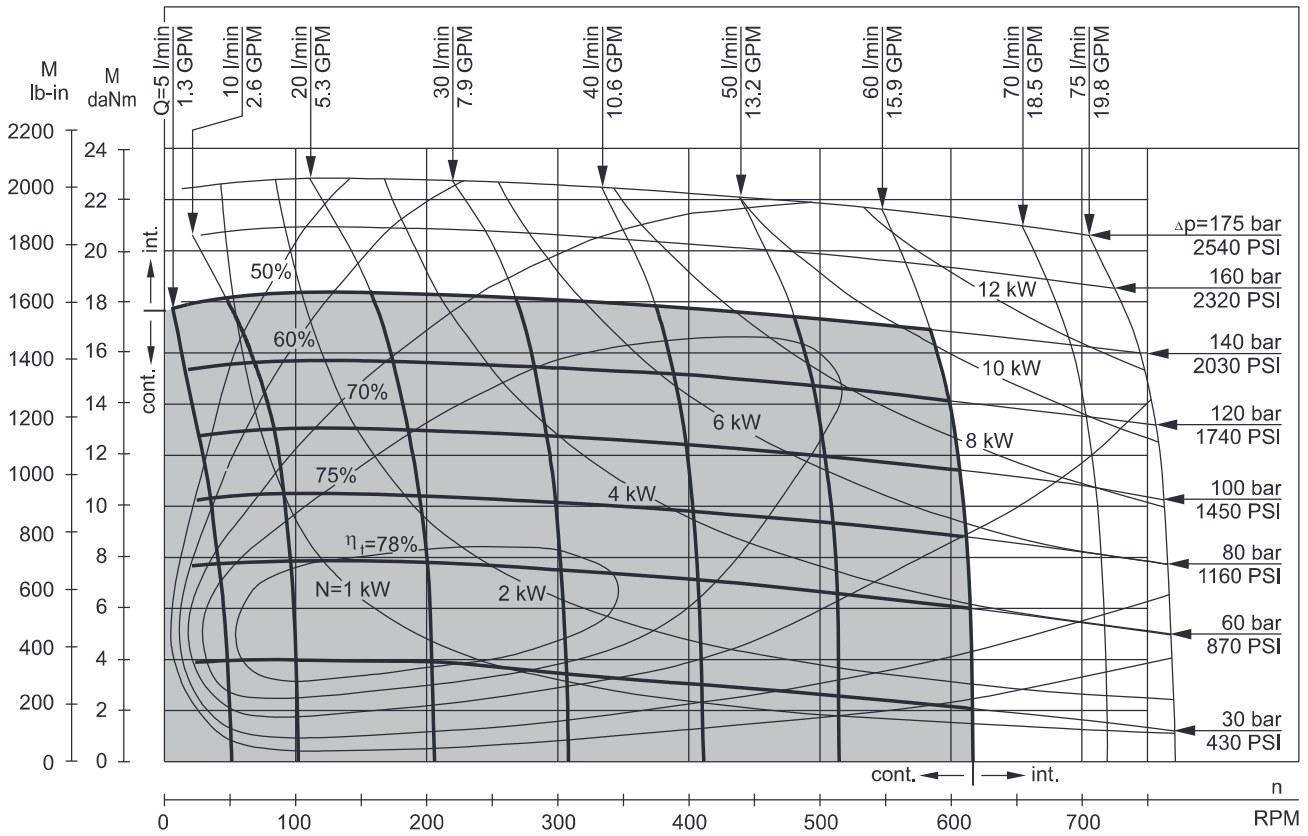

The function diagrams data is for average performance of randomly selected motors at back pressure 5÷10 bar [72.5÷145 PSI] and oil with viscosity of 32 mm²/s [150 SUS] at 50°C [122°F].

FUNCTION DIAGRAMS

MP 125

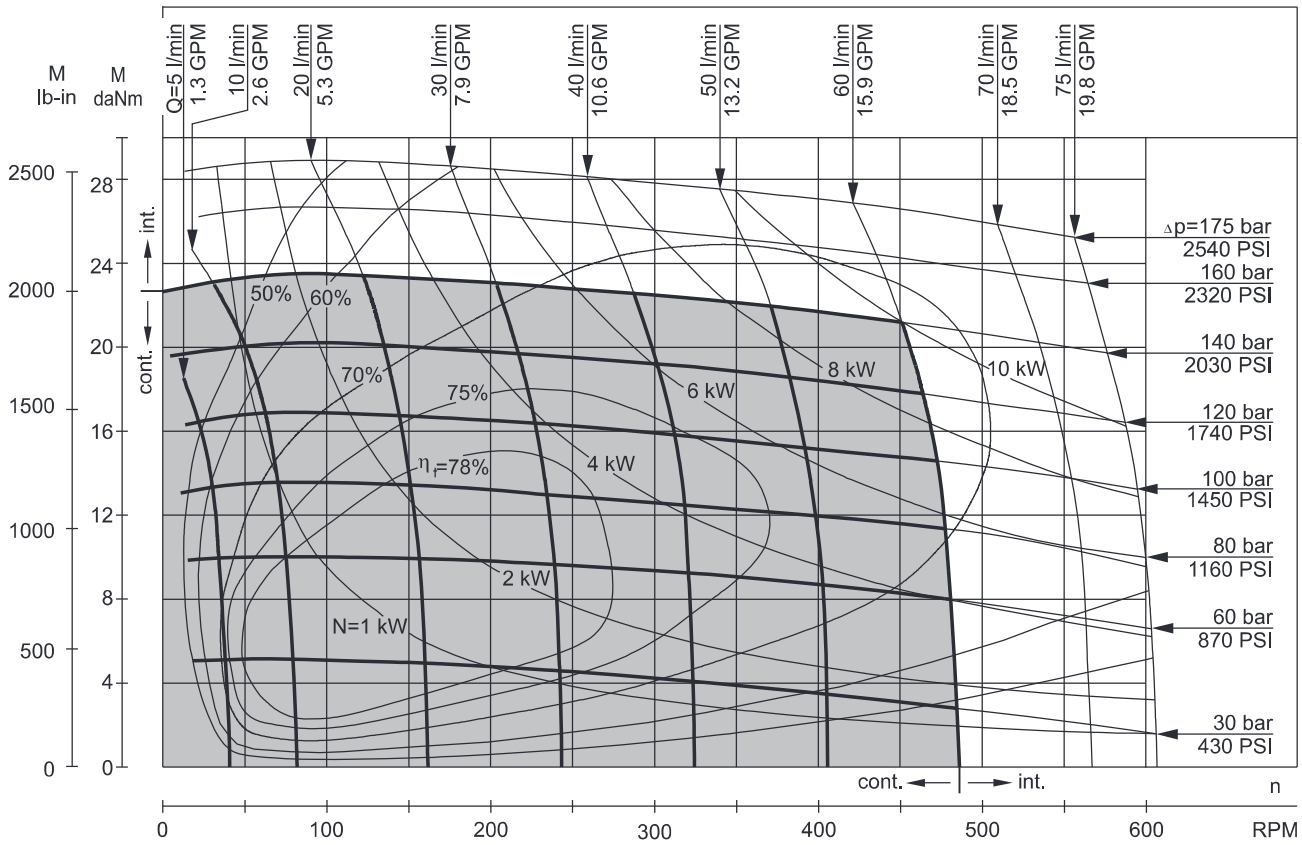

MP 160

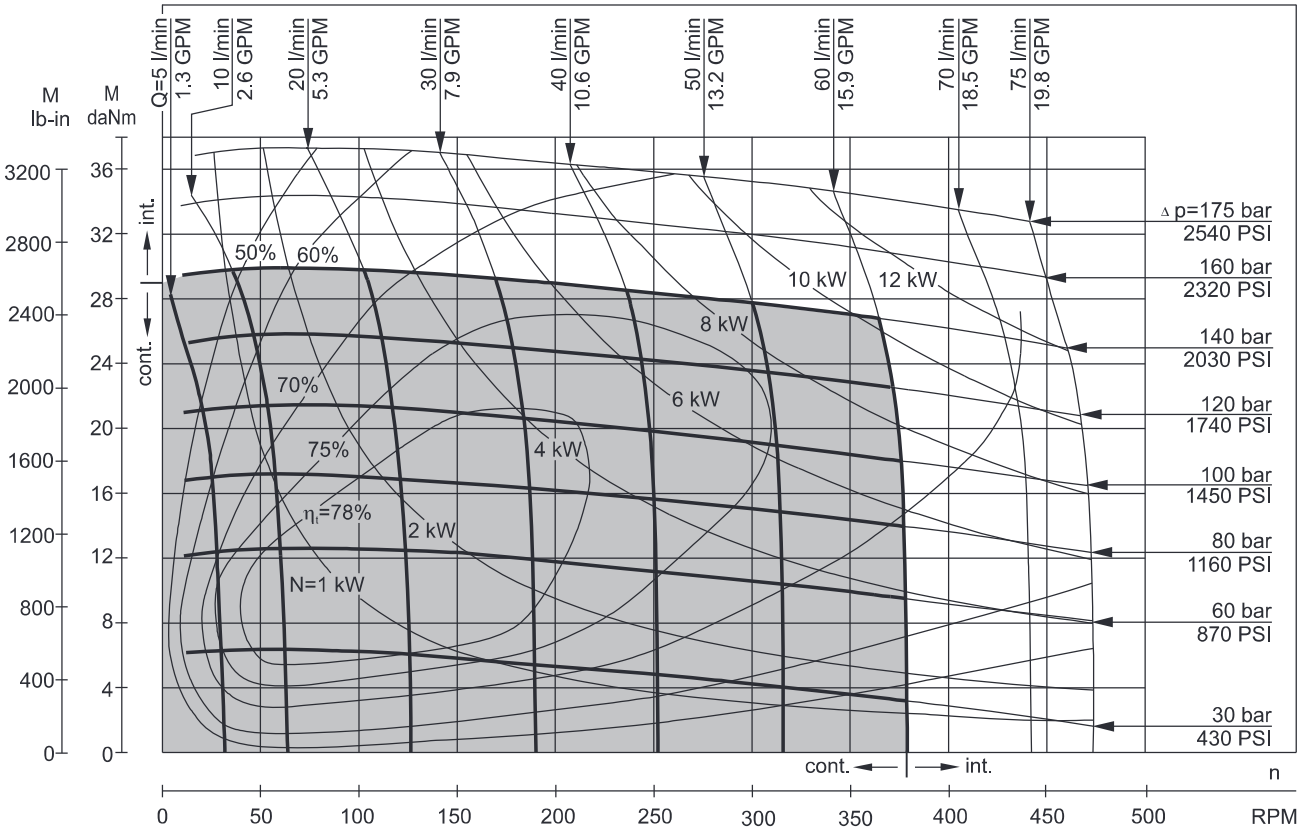

The function diagrams data is for average performance of randomly selected motors at back pressure 5÷10 bar [72.5÷145 PSI] and oil with viscosity of 32 mm²/s [150 SUS] at 50°C [122°F].

FUNCTION DIAGRAMS

MP 200

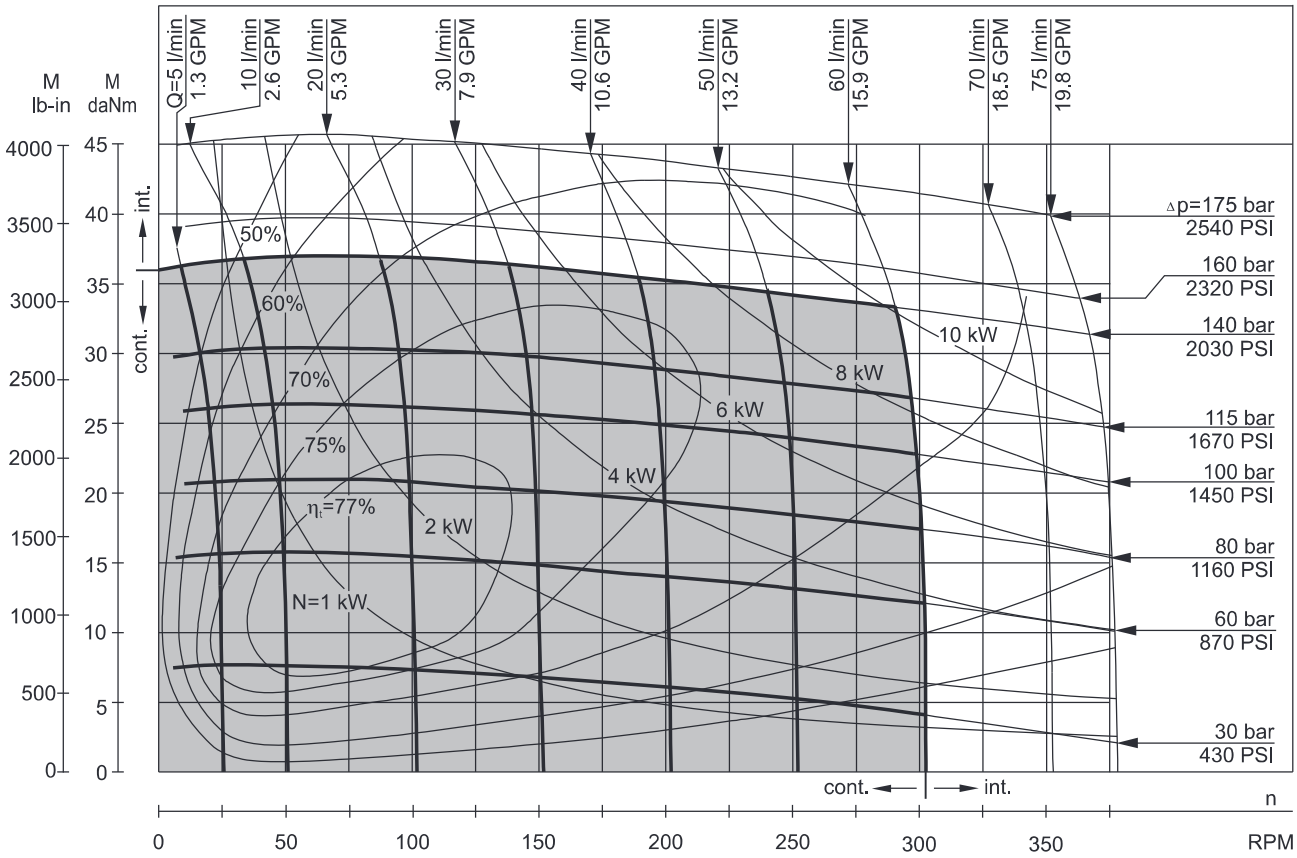

MP 250

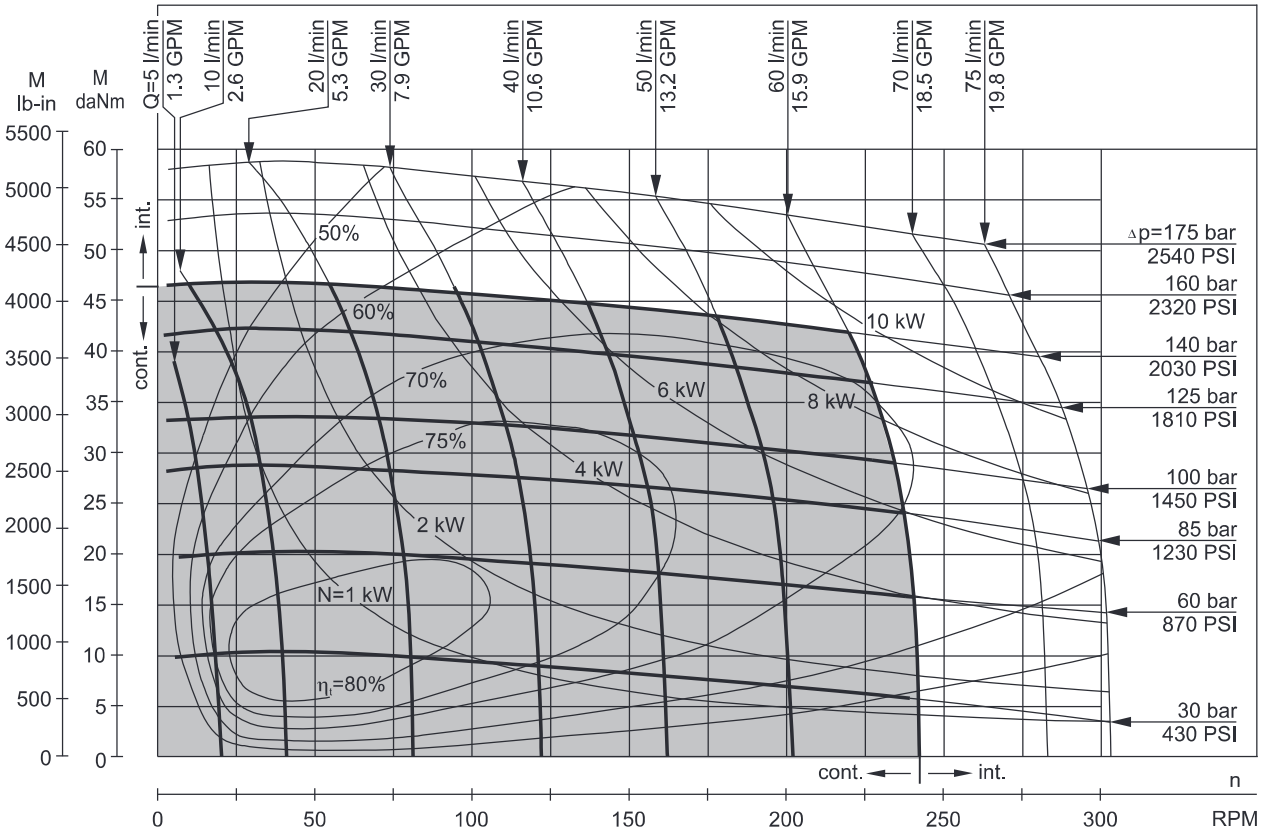

The function diagrams data is for average performance of randomly selected motors at back pressure 5÷10 bar [72.5÷145 PSI] and oil with viscosity of 32 mm²/s [150 SUS] at 50°C [122°F].

FUNCTION DIAGRAMS

MP 315

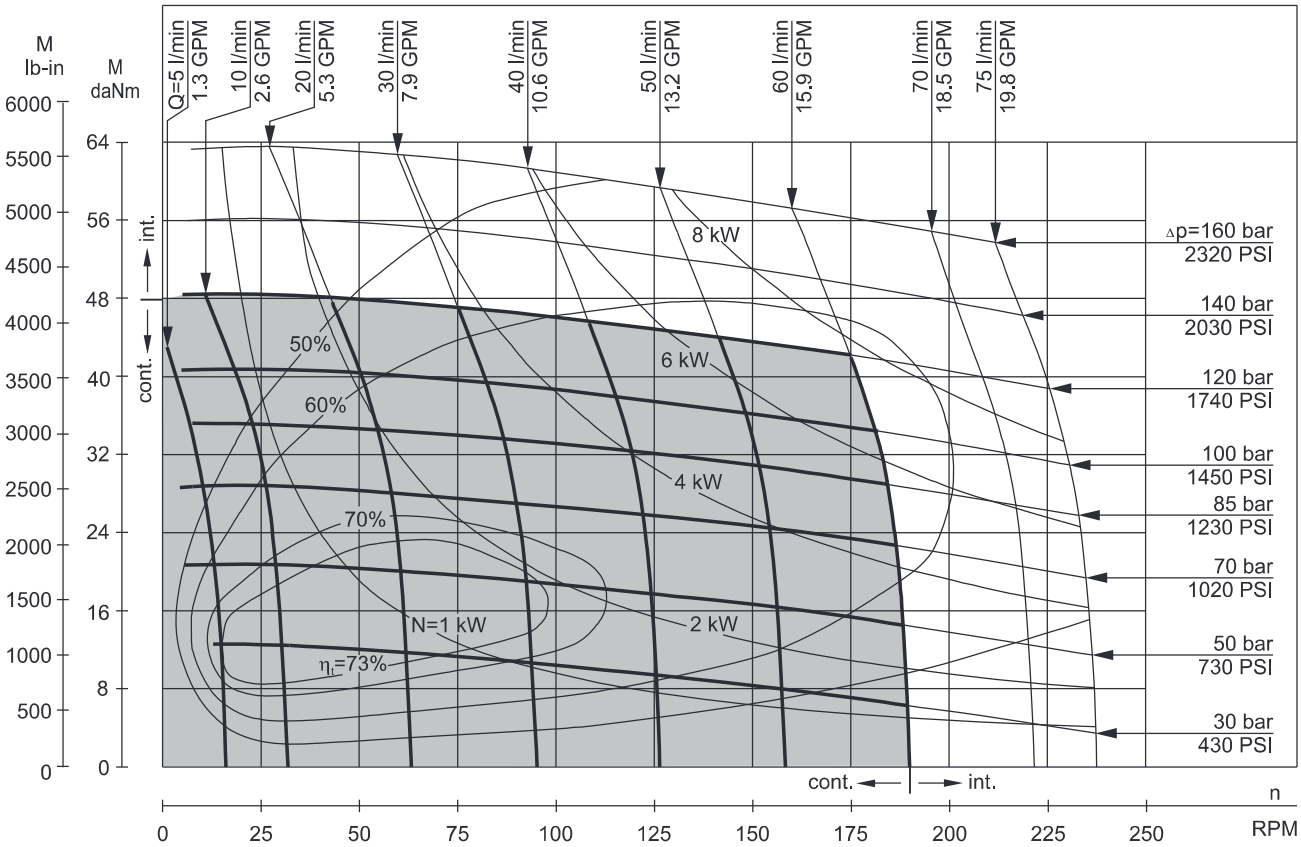

MP 400

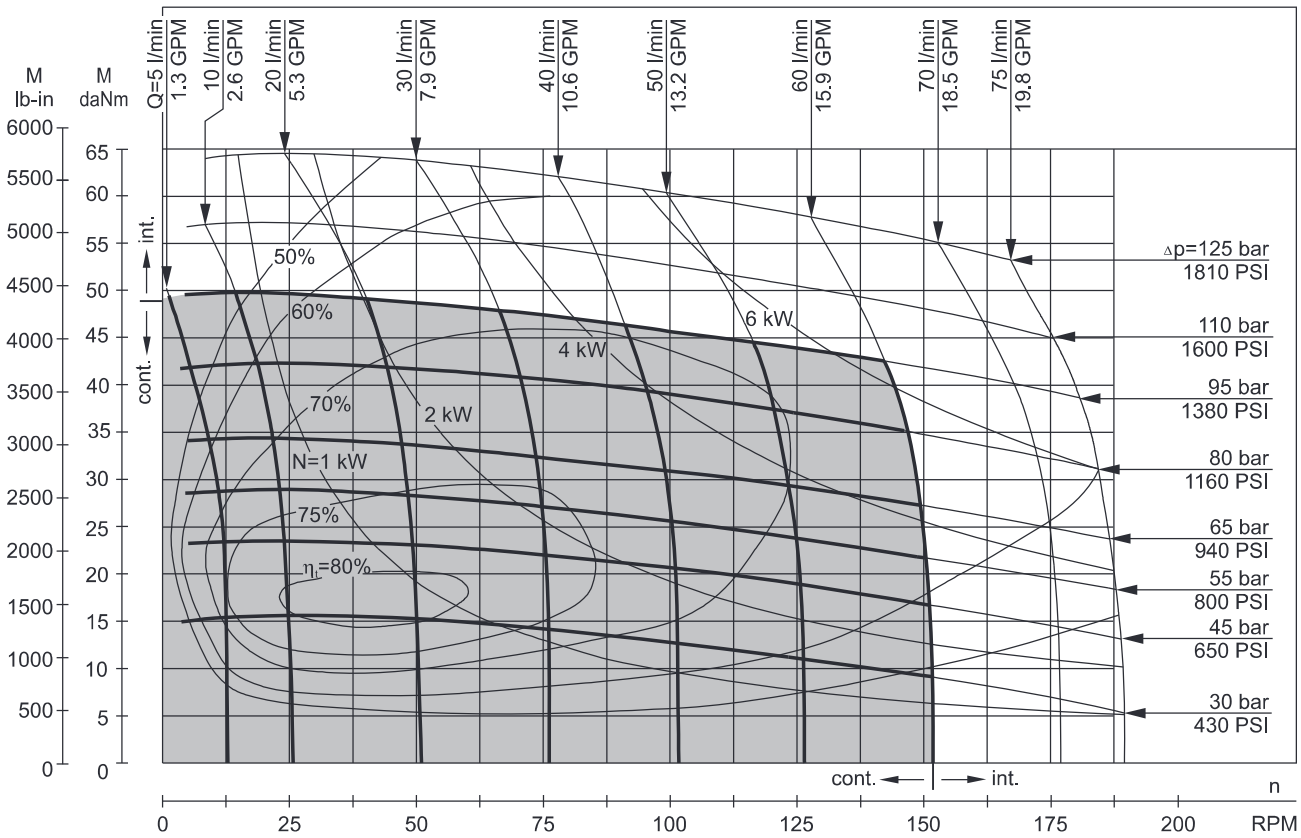

The function diagrams data is for average performance of randomly selected motors at back pressure 5÷10 bar [72.5÷145 PSI] and oil with viscosity of 32 mm²/s [150 SUS] at 50°C [122°F].

FUNCTION DIAGRAMS

MP 500

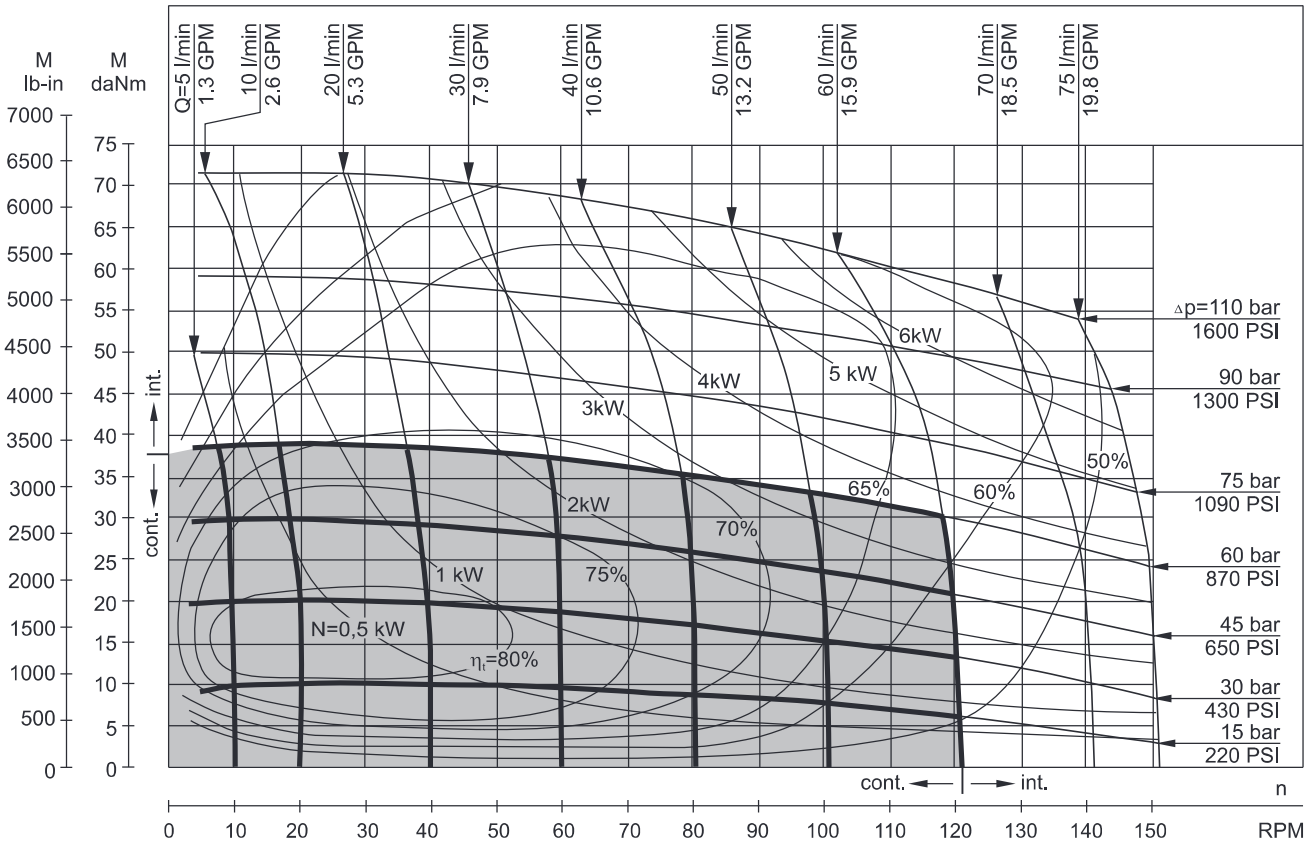

MP 630

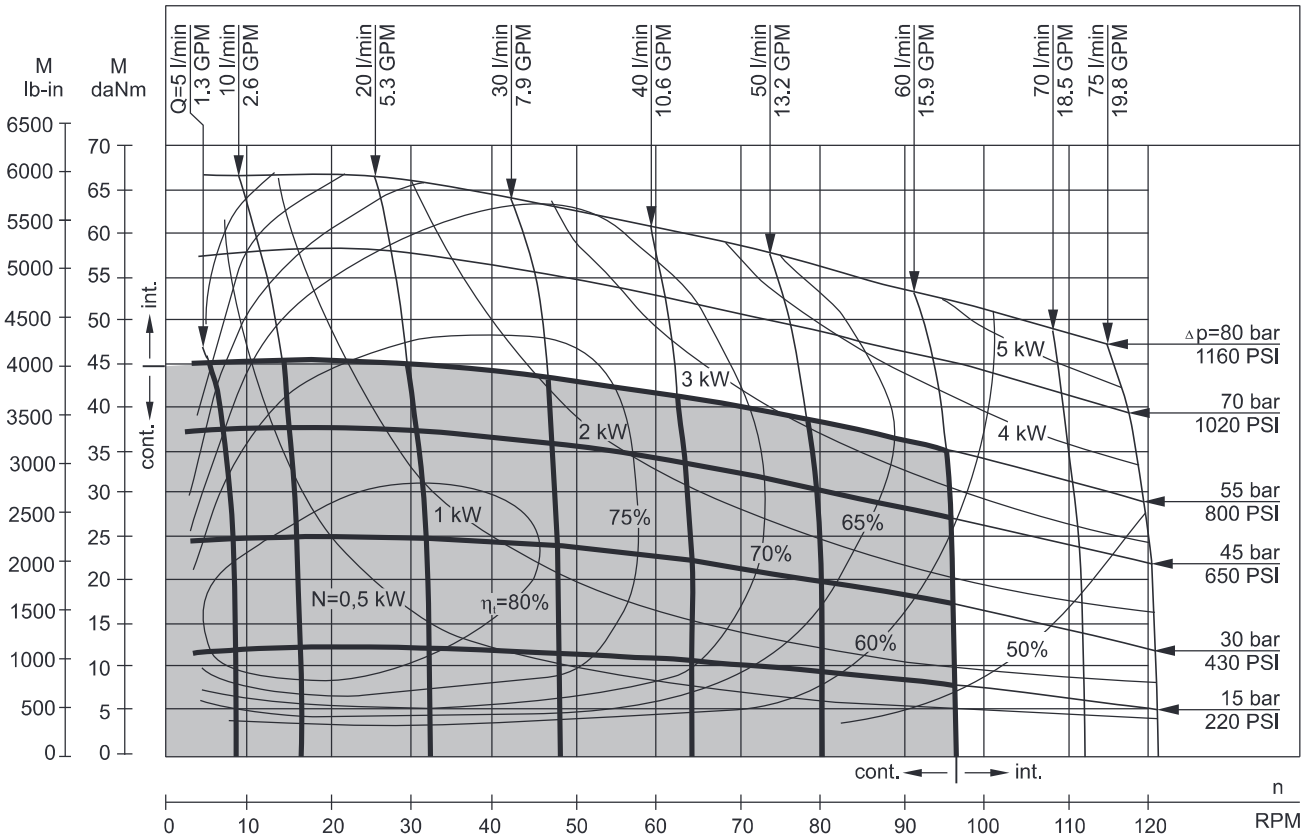

The function diagrams data is for average performance of randomly selected motors at back pressure 5÷10 bar [72.5÷145 PSI] and oil with viscosity of 32 mm²/s [150 SUS] at 50°C [122°F].

DIMENSIONS AND MOUNTING DATA

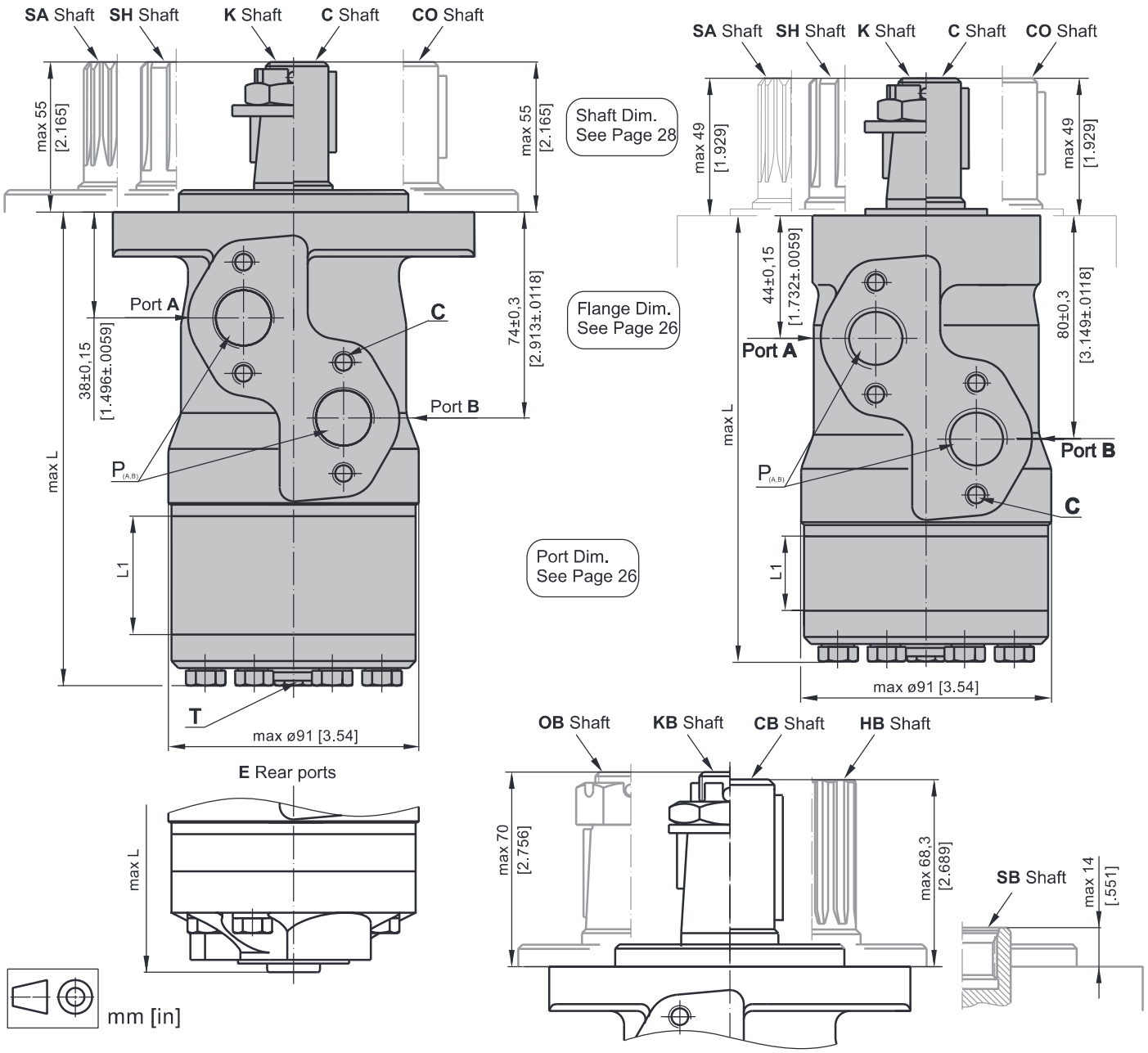

C : 4xM8 - 13 mm [.51 in] depth
P$_{(A, B)}$: 2xG1/2 or 2xM22x1,5 - 15 mm [.59 in] depth
T : G1/4 or M14x1,5 - 12 mm [.47 in] depth (plugged)

Standard Rotation
Viewed from Shaft End
Port **A** Pressurized - **CW**
Port **B** Pressurized - **CCW**

Reverse Rotation
Viewed from Shaft End
Port **A** Pressurized - **CCW**
Port **B** Pressurized - **CW**

Type	L, mm [in]	Type	L, mm [in]	Type	L, mm [in]	Type	L, mm [in]	L_1, mm [in]
MP(F) 25	134,0 [5.28]	MPQ 25	140,5 [5.53]	MP(F)E 25	150,0 [5.91]	MPQE 25	156,5 [6.16]	5,20 [.21]
MP(F) 32	135,0 [5.31]	MPQ 32	141,5 [5.57]	MP(F)E 32	151,5 [5.96]	MPQE 32	157,5 [6.20]	6,30 [.25]
MP(F) 40	136,5 [5.37]	MPQ 40	142,5 [5.61]	MP(F)E 40	152,5 [6.00]	MPQE 40	158,5 [6.24]	7,40 [.29]
MP(F) 50	135,5 [5.33]	MPQ 50	142,0 [5.59]	MP(F)E 50	151,5 [5.96]	MPQE 50	158,0 [6.22]	6,67 [.26]
MP(F) 80	139,5 [5.49]	MPQ 80	146,0 [5.75]	MP(F)E 80	155,5 [6.12]	MPQE 80	162,0 [6.38]	10,67 [.42]
MP(F) 100	142,0 [5.59]	MPQ 100	148,5 [5.85]	MP(F)E 100	158,5 [6.24]	MPQE 100	164,5 [6.48]	13,33 [.52]
MP(F) 125	145,5 [5.73]	MPQ 125	152,0 [5.98]	MP(F)E 125	161,5 [6.36]	MPQE 125	168,0 [6.61]	16,67 [.66]
MP(F) 160	150,0 [5.91]	MPQ 160	156,5 [6.16]	MP(F)E 160	166,5 [6.56]	MPQE 160	172,5 [6.79]	21,33 [.84]
MP(F) 200	155,5 [6.12]	MPQ 200	162,0 [6.38]	MP(F)E 200	171,5 [6.75]	MPQE 200	178,0 [7.01]	26,67 [1.05]
MP(F) 250	162,0 [6.38]	MPQ 250	168,5 [6.63]	MP(F)E 250	178,5 [7.03]	MPQE 250	184,5 [7.26]	33,33 [1.31]
MP(F) 315	171,5 [6.75]	MPQ 315	178,0 [7.01]	MP(F)E 315	187,5 [7.38]	MPQE 315	194,0 [7.64]	42,67 [1.68]
MP(F) 400	182,0 [7.17]	MPQ 400	188,5 [7.42]	MP(F)E 400	198,5 [7.81]	MPQE 400	204,5 [8.05]	53,33 [2.10]
MP(F) 500	195,5 [7.70]	MPQ 500	202,0 [7.95]	MP(F)E 500	211,5 [8.33]	MPQE 500	218,0 [8.58]	66,63 [2.62]
MP(F) 630	213,0 [8.39]	MPQ 630	219,0 [8.62]	MP(F)E 630	229,0 [9.02]	MPQE 630	235,0 [9.25]	84,00 [3.31]

MOUNTING

Oval Mount (2 Holes)

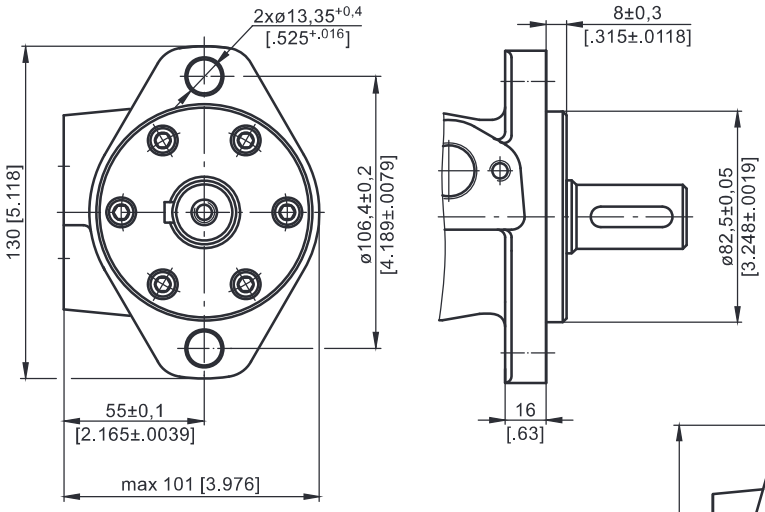

F - Oval Mount (4 Holes)

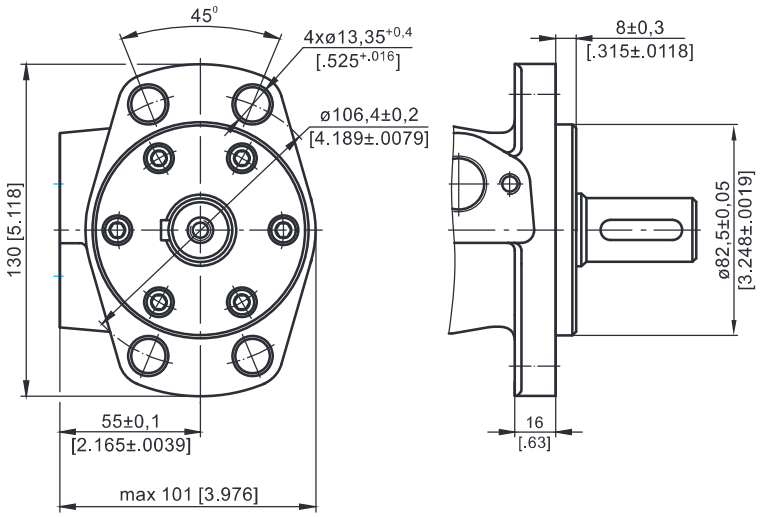

Q - Square Mount (4 Bolts)

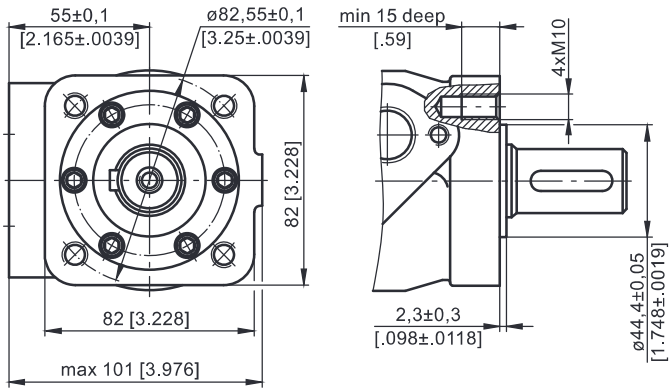

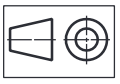

mm [in]

PORTS

Side Ports

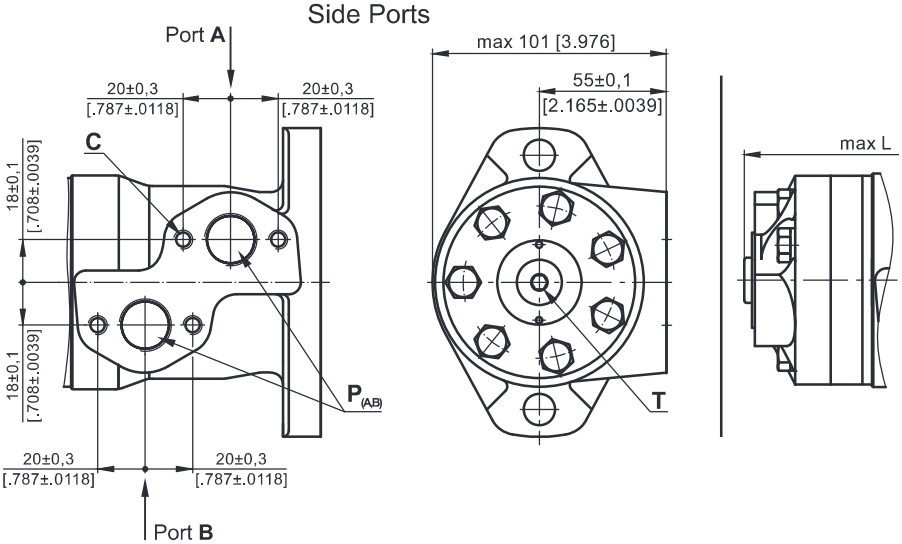

E Rear Ports

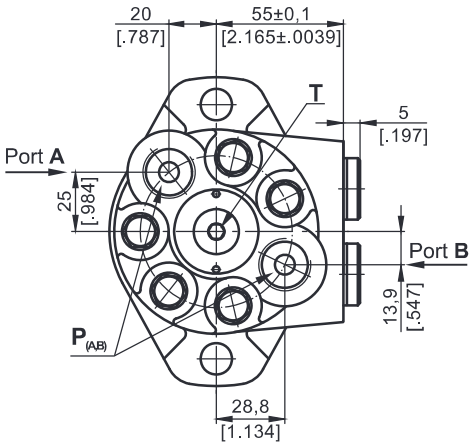

C : 4xM8 - 13 mm [.51 in] depth
P$_{(A, B)}$: 2xG1/2 or 2xM22x1,5 - 15 mm [.59 in] depth
T : G1/4 or M14x1,5 - 12 mm [.47 in] depth (plugged)

Standard Rotation
Viewed from Shaft End
Port **A** Pressurized - **CW**
Port **B** Pressurized - **CCW**

Reverse Rotation
Viewed from Shaft End
Port **A** Pressurized - **CCW**
Port **B** Pressurized - **CW**

DIMENSIONS AND MOUNTING DATA - MPW

W - Wheel Mount

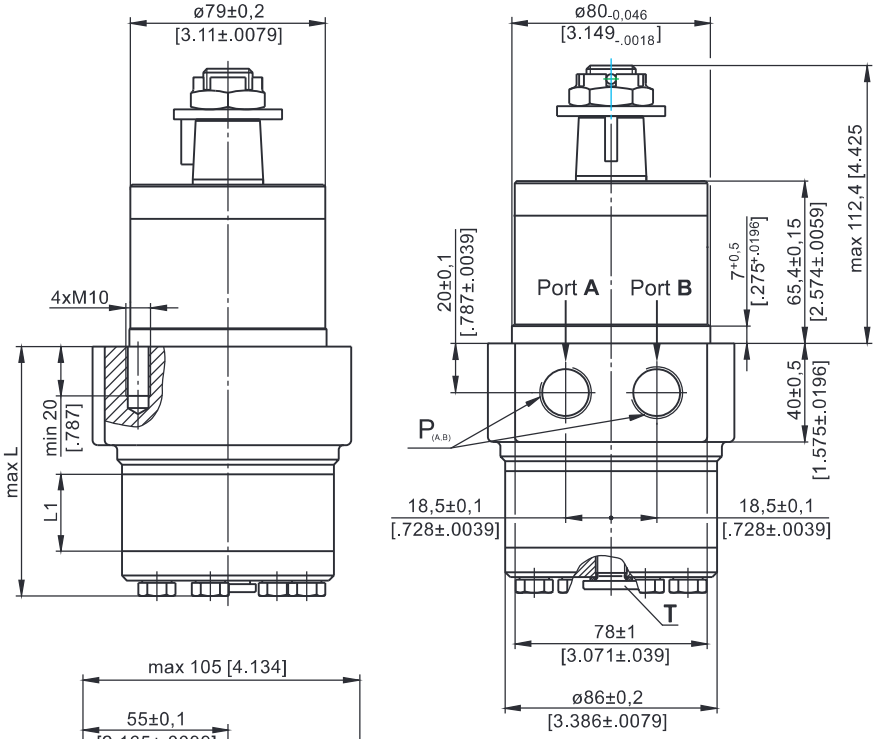

Type	L, mm [in]	L_1, mm [in]
MPW 25	77,0 [3.03]	5,20 [.21]
MPW 32	78,0 [3.07]	6,30 [.25]
MPW 40	79,5 [3.13]	7,40 [.29]
MPW 50	78,5 [3.09]	6,67 [.26]
MPW 80	82,5 [3.25]	10,67 [.42]
MPW 100	85,0 [3.35]	13,33 [.52]
MPW 125	88,5 [3.48]	16,67 [.66]
MPW 160	93,0 [3.66]	21,33 [.84]
MPW 200	98,5 [3.88]	26,67 [1.05]
MPW 250	105,0 [4.13]	33,33 [1.31]
MPW 315	114,5 [4.51]	42,67 [1.68]
MPW 400	125,0 [4.92]	53,33 [2.10]
MPW 500	138,5 [5.45]	66,63 [2.62]
MPW 630	156,0 [6.14]	84,00 [3.31]

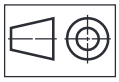

mm [in]

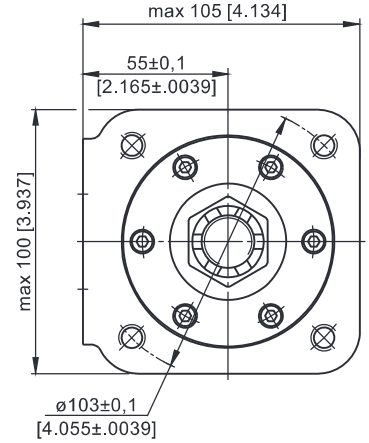

Standard Rotation
Viewed from Shaft End
Port **A** Pressurized - **CW**
Port **B** Pressurized - **CCW**

Reverse Rotation
Viewed from Shaft End
Port **A** Pressurized - **CCW**
Port **B** Pressurized - **CW**

P$_{(A, B)}$: 2xG1/2 or 2xM22x1,5 - 15 mm [.59 in] depth
T : G1/4 or M14x1,5 - 12 mm [.47 in] depth (plugged)

PERMISSIBLE SHAFT LOADS

MPWN

The curves apply to a B10 bearing life of 2000 hours.

1. Max. radial shaft load
2. n= 50 RPM
3. n=200 RPM
4. n=800 RPM

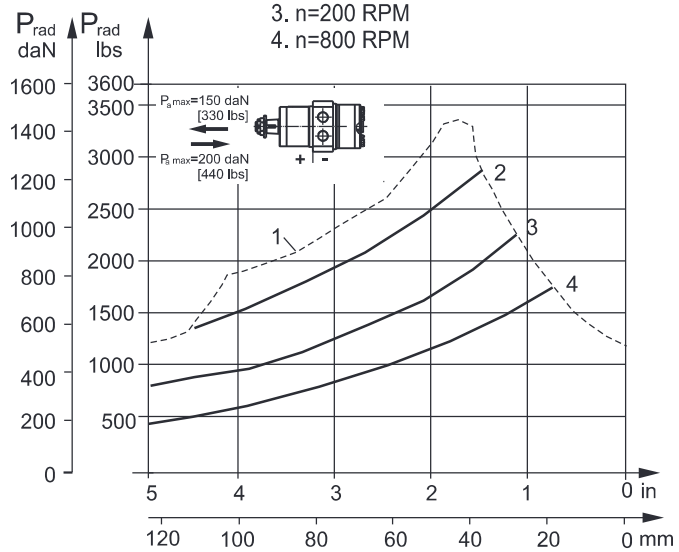

MPW

1. Max. radial shaft load
2. n=300 RPM
3. n=500 RPM
4. n=800 RPM

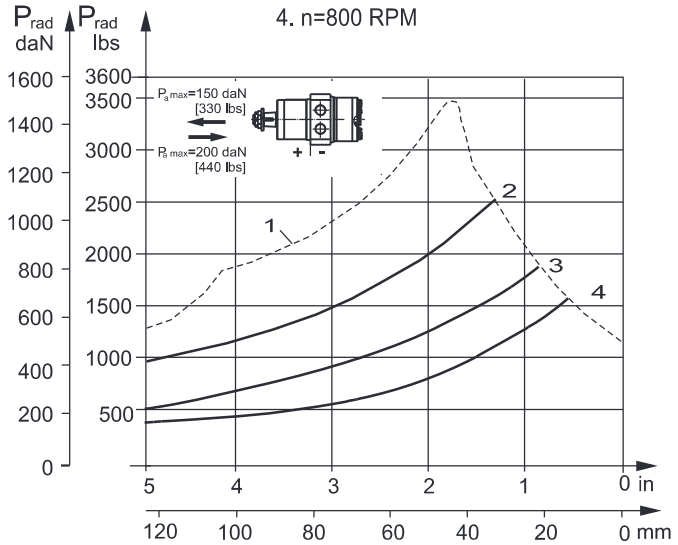

SHAFT EXTENSIONS FOR MP AND MR MOTORS

C - ø25 straight, Parallel key A8x7x32 DIN 6885
Max. Torque 34 daNm [3010 lb-in]

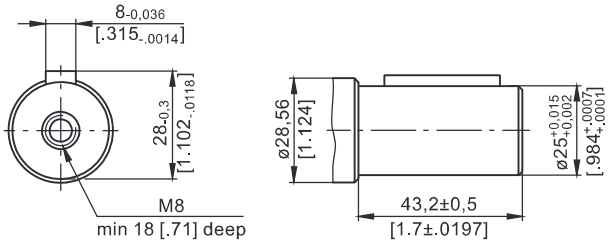

CB - ø32 straight, Parallel key A10x8x45 DIN 6885
Max. Torque 77 daNm [6815 lb-in]

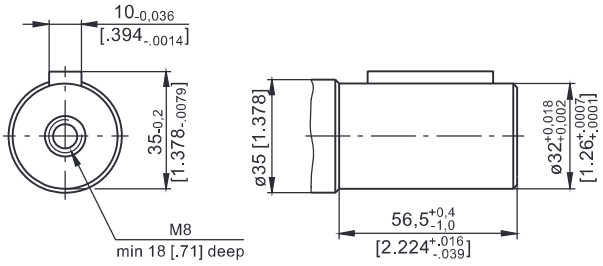

CO - ø1" straight, Parallel key ¼"x¼"x1¼" BS46
Max. Torque 34 daNm [3010 lb-in]

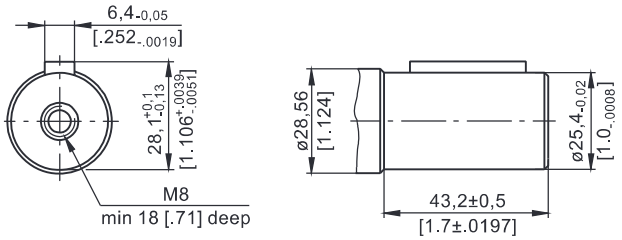

SB - splined A25x22xH10 DIN 5482
Max. Torque 34 daNm [3010 lb-in]

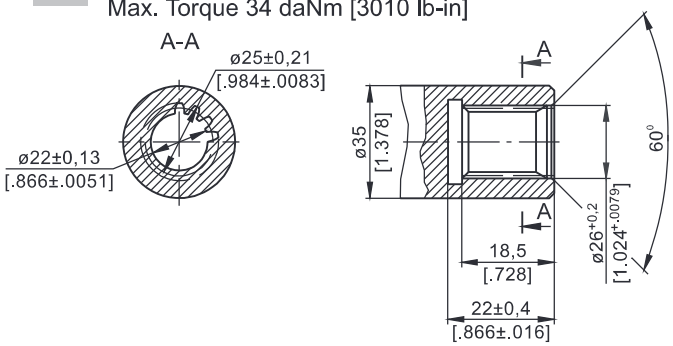

SH - splined, BS 2059 (SAE 6B)
Max. Torque 40 daNm [3540 lb-in]

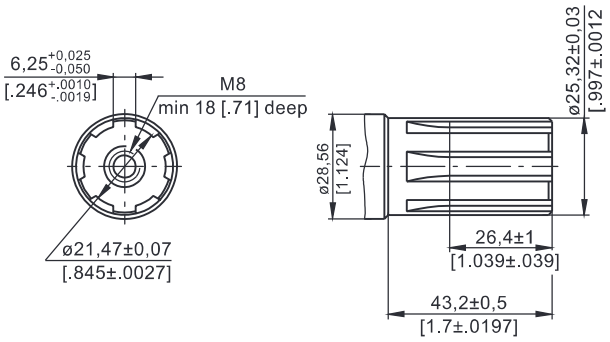

KB - tapered 1:10, Parallel key B6x6x20 DIN 6885
Max. Torque 77 daNm [6815 lb-in]

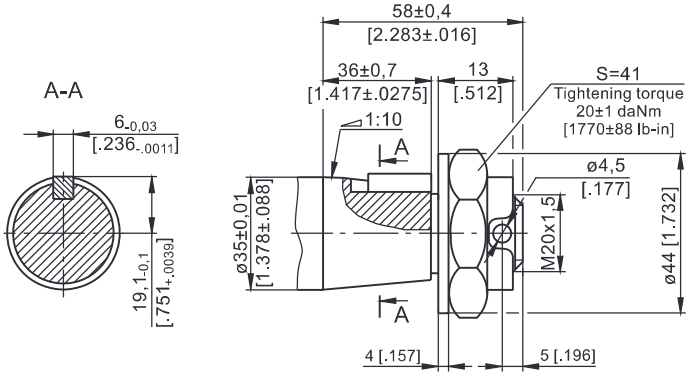

K - tapered 1:10, Parallel key B5x5x14 DIN 6885
Max. Torque 40 daNm [3540 lb-in]

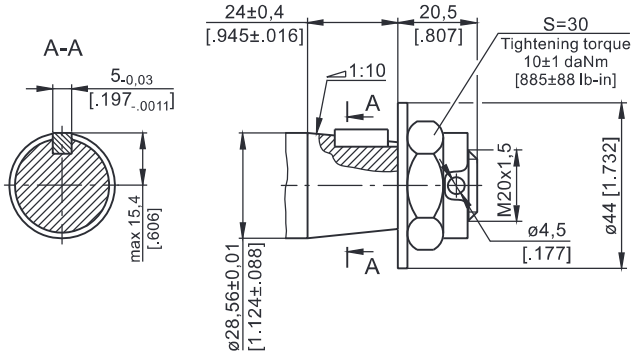

OB - tapered 1:8 SAEJ 501, Parallel key 5/16"x5/16"x1¼" BS46
Max. Torque 77 daNm [6815 lb-in]

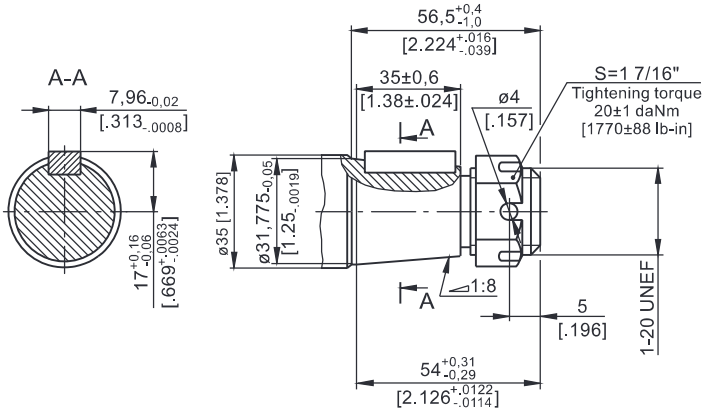

SA - splined, B25x22h9 DIN 5482
Max. Torque 40 daNm [3540 lb-in]

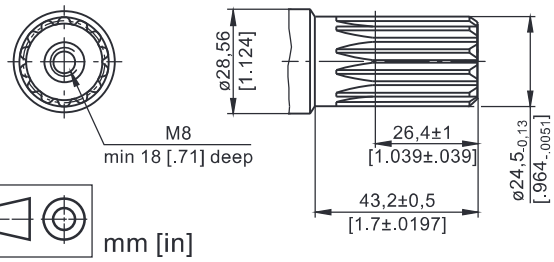

HB - ø1¼" splined 14T, ANSI B92.1-1976 Norm
Max. Torque 77 daNm [6815 lb-in]

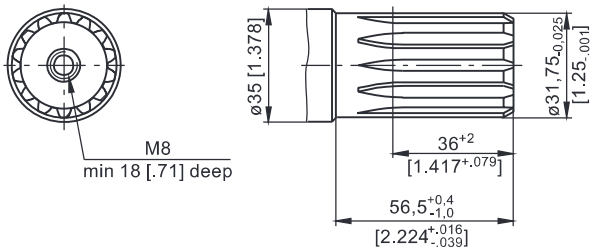

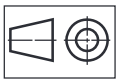
mm [in]

PERMISSIBLE SHAFT LOADS FOR MP AND MR MOTORS

The permissible radial shaft load **P_{rad}** depends on the speed **n**, RPM , distance **L** from the point of load to the mounting flange and shaft version.

Mounting Flange	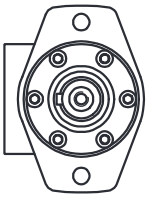	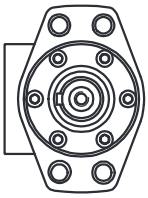	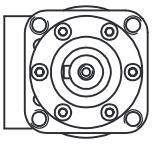
Shaft Version	**cylindrical - C, CO tapered - K, splined - SH**	**splined - HB cylindrical - CB**	**cylindrical - C, CO**
Radial Shaft Load P_{rad}, in mm	$\frac{800}{n} \times \frac{25000}{95+L}$, daN*	$\frac{800}{n} \times \frac{18750}{95+L}$, daN*	$\frac{800}{n} \times \frac{25000}{101+L}$, daN*
Radial Shaft Load P_{rad}, in inch	$\frac{800}{RPM} \times \frac{2215}{3.74+L}$,lbs*	$\frac{800}{RPM} \times \frac{1660}{3.74+L}$,lbs*	$\frac{800}{RPM} \times \frac{2215}{3.98+L}$,lbs*

* n < 200 RPM; max Prad=800 daN [1800 lbs]
n ≥200 RPM; L < 55 mm [2.2 in]

MP AND MR

Radial Shaft Load P_{rad} for C, CO Shaft Extensions by L=30 mm [1.18 in] (24 mm [.94 in])

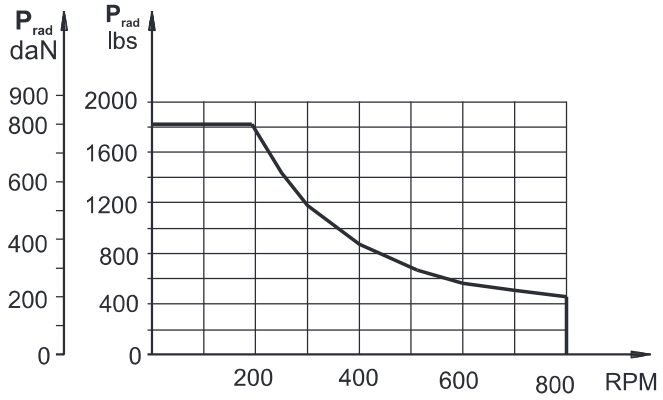

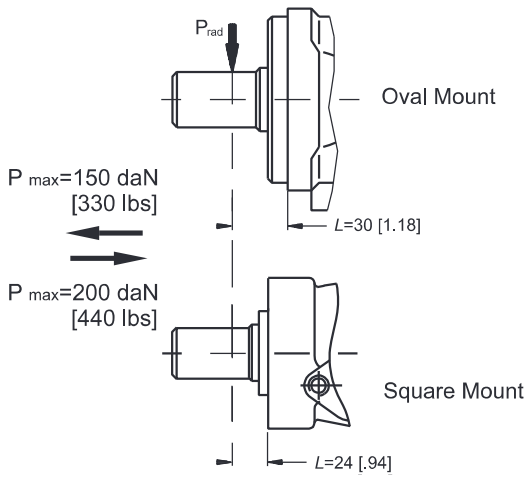

MPN AND MRN

The curves apply to a B10 bearing life of 2000 hours.

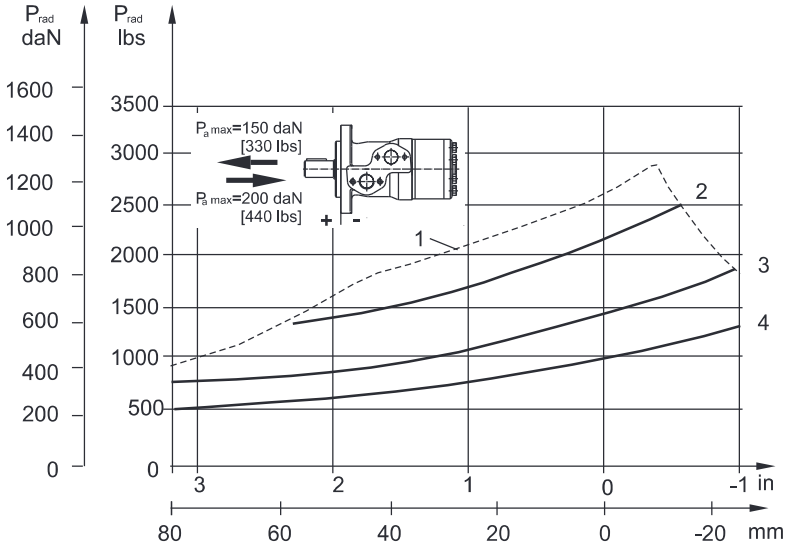

1. Max. radial shaft load
2. n= 50 RPM
3. n=200 RPM
4. n=800 RPM

MAX. PERMISSIBLE SHAFT SEAL PRESSURE FOR MP AND MR MOTORS

MP/MR...U1 motors with high pressure seal and without drain connection:

The shaft seal pressure equals the average of input pressure and return pressure.

$$P_{seal} = \frac{P_{input} + P_{return}}{2}$$

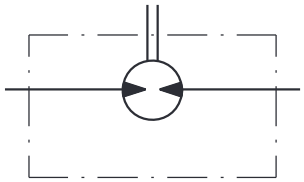

MP/MR...U motors with high pressure seal and drain connection:

The shaft seal pressure equals the pressure in the drain line.

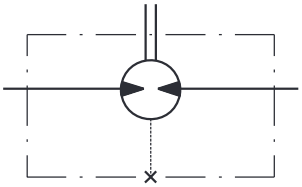

MP/MR...1 motors with low pressure seal or standard shaft seal and without drain connection:

The shaft seal pressure never exceeds the pressure in the return line.

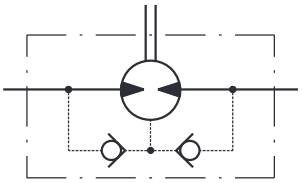

MP/MR... motors with low pressure seal or standard shaft seal and with drain connection:

The shaft seal pressure equals the pressure in the drain line.

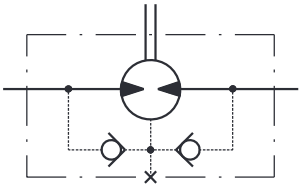

Max. return pressure without drain line or max. pressure in the drain line

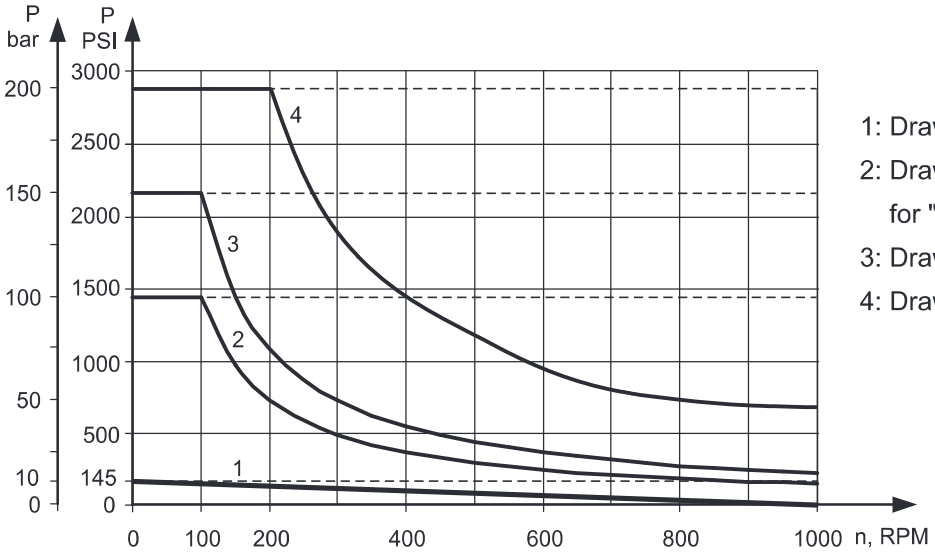

1: Drawing for Low Pressure Seal
2: Drawing for Standard Shaft Seal for "...B" shafts
3: Drawing for Standard Shaft Seal ("D" Seal)
4: Drawing for High Pressure Seal ("U" Seal)

——— - continuous operations
- - - - - - intermittent operations

ORDER CODE

	1	2	3	4	5	6	7	8	9	10
M P										

Pos.1 - Mounting Flange

omit - Oval mount, two holes
F - Oval mount, four holes
Q - Square mount, four bolts
W - Wheel mount

Pos.2 - Option (needle bearings)

omit - none
N - with needle bearings

Pos.3 - Port type

omit - Side ports
E - Rear ports

Pos.4 - Displacement code

25* - 25,0 cm^3/rev [1.52 in^3/rev]
32* - 32,0 cm^3/rev [1.95 in^3/rev]
40* - 40,0 cm^3/rev [2.44 in^3/rev]
50 - 49,5 cm^3/rev [3.02 in^3/rev]
80 - 79,2 cm^3/rev [4.83 in^3/rev]
100 - 99,0 cm^3/rev [6.04 in^3/rev]
125 - 123,8 cm^3/rev [7.55 in^3/rev]
160 - 158,4 cm^3/rev [9.66 in^3/rev]
200 - 198,0 cm^3/rev [12.10 in^3/rev]
250 - 247,5 cm^3/rev [15.10 in^3/rev]
315 - 316,8 cm^3/rev [19.30 in^3/rev]
400 - 396,0 cm^3/rev [24.16 in^3/rev]
500 - 495,0 cm^3/rev [30.20 in^3/rev]
630 - 623,6 cm^3/rev [38.05 in^3/rev]

Pos. 5 - Shaft Extensions** (see page 28)

C - ø25 straight, Parallel key A8x7x32 DIN6885
VC - ø25 straight, Parallel key A8x7x32 DIN6885 with corrosion resistant bushing

CO - ø1" straight, Parallel key ¼"x¼"x1¼" BS46
VCO - ø1" straight, Parallel key ¼"x¼"x1¼" BS46 with corrosion resistant bushing

SH - ø25,32 splined BS 2059 (SAE 6B)
VSH - ø25,32 splined BS 2059 (SAE 6B) with corrosion resistant bushing

K - ø28,56 tapered 1:10, Parallel key B5x5x14 DIN6885
SA - ø24,5 splined B 25x22 DIN 5482
VSA - ø24,5 splined B 25x22 DIN 5482 with corrosion resistant bushing

CB - ø32 straight, Parallel key A10x8x45 DIN6885
KB - ø35 tapered 1:10, Parallel key B6x6x20 DIN6885
SB - splined A 25x22 DIN 5482
OB - ø1¼" tapered1:8, Parallel key $^5/_{16}$"x$^5/_{16}$"x1¼" BS46
HB - ø1¼" splined 14T ANSI B92.1 - 1976

Pos. 6 - Shaft Seal Version (see page 30)

omit - Low pressure shaft seal or Standard shaft seal for "...**B**" shaft
D - Standard shaft seal
U - High pressure shaft seal (without check valves)

Pos. 7 - Drain Port

omit - with drain port
1 - without drain port

Pos. 8 - Ports

omit - BSPP (ISO 228)
M - Metric (ISO 262)

Pos. 9 - Special Features (see page 120)

Pos.10 - Design Series

omit - Factory specified

NOTES: * Not with Low Pressure Seal.
** The permissible output torque for shafts must not be exceeded.

The following combinations are not allowed:
- **Q** flange with "**...B**" shafts;
- **W** flange with "**...B**" shafts or **E** rear ports;
- **N** option with "**...B**" shafts, Low Pressure Seal or **U** option;
- "**...B**" shafts with **D** and **U** shaft seals.

The hydraulic motors are mangano-phosphatized as standard.